JPRS 80375

22 March 1982

East Europe Report

ECONOMIC AND INDUSTRIAL AFFAIRS

No. 2247

FBIS FOREIGN BROADCAST INFORMATION SERVICE

NOTE

JPRS publications contain information primarily from foreign newspapers, periodicals and books, but also from news agency transmissions and broadcasts. Materials from foreign-language sources are translated; those from English-language sources are transcribed or reprinted, with the original phrasing and other characteristics retained.

Headlines, editorial reports, and material enclosed in brackets [] are supplied by JPRS. Processing indicators such as [Text] or [Excerpt] in the first line of each item, or following the last line of a brief, indicate how the original information was processed. Where no processing indicator is given, the information was summarized or extracted.

Unfamiliar names rendered phonetically or transliterated are enclosed in parentheses. Words or names preceded by a question mark and enclosed in parentheses were not clear in the original but have been supplied as appropriate in context. Other unattributed parenthetical notes within the body of an item originate with the source. Times within items are as given by source.

The contents of this publication in no way represent the policies, views or attitudes of the U.S. Government.

PROCUREMENT OF PUBLICATIONS

JPRS publications may be ordered from the National Technical Information Service, Springfield, Virginia 22161. In ordering, it is recommended that the JPRS number, title, date and author, if applicable, of publication be cited.

Current JPRS publications are announced in Government Reports Announcements issued semi-monthly by the National Technical Information Service, and are listed in the Monthly Catalog of U.S. Government Publications issued by the Superintendent of Documents, U.S. Government Printing Office, Washington, D.C. 20402.

Correspondence pertaining to matters other than procurement may be addressed to Joint Publications Research Service, 1000 North Glebe Road, Arlington, Virginia 22201.

JPRS 80375

22 March 1982

EAST EUROPE REPORT

ECONOMIC AND INDUSTRIAL AFFAIRS

No. 2247

CONTENTS

INTERNATIONAL AFFAIRS

East-West Trade's Continuing Stagnation Phase Analyzed
(Heinrich Machowski; DIW-WOCHENBERICHT, 12 Nov 81) 1

Yugoslav-Hungarian Trade, Economic Cooperation
(EKONOMSKA POLITIKA, 1 Feb 82) 12

CEMA Plastics Industry Growth Reviewed
(AW-DDR-AUSSENWIRTSCHAFT, 27 Jan 82) 14

BULGARIA

Negative Reaction to New Economic Mechanism Implied
(Belcho Zhivkov; OTECHESTVEN FRONT, 29 Jan 82) 19

CZECHOSLOVAKIA

CSSR Finance Minister Explains Tasks of 1982 Budget
(Leopold, Ler; HOSPODARSKE NOVINY, 29 Dec 81) 21

Bank Monetary Policy To Stimulate Exports
(Jan Stejskal; NOVA MYSL, No 12, 1981) 31

Deputy Minister Views Foreign Trade Policy
(Jaroslav Jakubec; HOSPODARSKE NOVINY, 22 Jan 82) 43

GERMAN DEMOCRATIC REPUBLIC

Briefs
Merchant Fleet Reduction 52

HUNGARY

Hungary Rediscovers Mortgage Bonds
(Endre Ferenczi; FIGYELO, 10 Feb 82) 53

Several Enterprise Business Work Partnerships Launched
(MAGYAR HIRLAP, 18 Feb 82) 56

Chief Crop Production Systems Plans for 1982
(Janos Toth, et al.; MAGYAR MEZOGAZDASAG, No 2, 1982) .. 58

State Farm Accounting System Viewed
(FIGYELO, 10 Feb 82) 65

Preliminary Figures In Agricultural Results Published
(Ferenc Leszak; FIGYELO, 10 Feb 82) 69

POLAND

Model for Economic Development to 1990 Published
(Zdzislaw Sadowski, et al.; GOSPODARKA PLANOWA, Oct 81) ... 72

New Realities of Economic Reform Considered
(Czeslaw Bobrowski; ZYCIE WARSZAWY, 23-24 Jan 82) 85

Price Situation Updated in Interview
(Zdzislaw Krasinski Interview; ZYCIE WARSZAWY, 16 Feb 82).. 90

Recent Agricultural Data Provided
(RZECZPOSPOLITA, 19, 20 Jan 82) 93

Updated Harvest Results
January Livestock Inventory
Sugar Production

Deep Sea Fishing Goals Discussed at Conference
(RZECZPOSPOLITA, 22 Jan 82) 97

Coal Supply Shortage Assessed
(Krzysztof Fronczak; ZYCIE GOSPODARCZE, 6 Dec 81) 99

YUGOSLAVIA

'Stabilization Program' Held Nonexistent
(Slaven Letica; DUGA, 16 Jan 82) 103

Foreign Trade Regional Breakdown, 1981
(M. Urosevic; PRIVREDNI PREGLED, 23 Feb 82) 108

Trade With Libya, Malta
(PRIVREDNI PREGLED, 4 Feb 82) 111

Draft Agreement Estimates Energy Production to 1985
(PRIVREDNI PREGLED, 20-22 Feb 82) 113

Problems in Oil, Oil Derivative Supplies in Vojvodina
(Slavica Razic; PRIVREDNI PREGLED, 12 Feb 82) 115

Air Transport, 1981 Examined
(PRIVREDNI PREGLED, 3 Feb 82) 118

Results of Restrictions on Private Farming
(Tomislav Kapetanic; PRIVREDNI PREGLED, 18 Feb 82) 119

Briefs
Job Insecurity for Workers in Austria 122
Fires in 1981 122
Railroad Problems 122
Port of Kopar 123

EAST-WEST TRADE'S CONTINUING STAGNATION PHASE ANALYZED

West Berlin DIW-WOCHENBERICHT in German Vol 48 No 46, 12 Nov 81 pp 535-541

/Article by Heinrich Machowski, German Institute for Economic Research, West Berlin: "East-West Trade in Continuing Stagnation Phase." A translation of a relevant analysis by writers of the East Berlin Institute for International Politics and Economics (IPW) is published under the heading, "Prospects for East-West Economic Relations in 1980's Analyzed," in JPRS 80032, 4 Feb 82, No 2228 of this series, pp 1-14/

/Text/ The real exchange of goods between the European member countries of CEMA[1] and the OECD countries--East-West trade-stagnated in 1980. In nominal terms East European exports to the OECD region rose by more than 21 percent, imports by just under 12 percent. These growth rates, however, conceal hefty price increases: The average values of East European exports--estimated[2]--were about 20 percent, of CEMA imports about 14 percent above the level of the preceding year. This represents a renewed almost 5 percent improvement in the exchange ratio in favor of the CEMA countries. Their exports to the West rose only slightly in real terms (+ 1 percent), while imports somewhat declined in real terms (- 2 percent).

Within this overall result, though, remarkable national differences are to be noted. Last year the USSR managed again to raise its percentage share in East-West trade to a total of 50 percent (1970: 36 percent; 1975: 43.5 percent). Its exports and imports in trade with the West increased by 3 percent each in real terms (export prices: + 23 percent; import prices: + 15 percent; terms of trade: + 7 percent). The trade of the six smaller CEMA countries recorded a far less satisfactory development. Their exports to the West stagnated in real terms, while the corresponding imports declined by more than 8 percent in real terms, largely due to the 12 percent decline in Polish imports. These different trends are particularly evident when we consult the OECD data[3] for our quarterly analyses: The smaller CEMA countries achieved their best results in Western trade in the fourth quarter of 1979; ever since the trend has been toward a definite decline. By contrast the quarterly values of Soviet trade with the West rose in 1980 also, and no change in the trend has so far been noted.

Asymmetrical Trade Links

A third of total 1980 Soviet exports went to the Western industrial countries. In the course of the last 10 years this share, primarily related to prices, rose almost steadily from a base of 19 percent. As regards the USSR's total imports, last year 35 percent originated in the OECD region. Though this rate is 10 percent

higher than in 1970, it has stopped rising in the past 5 years. At the beginning of the 1970's the OECD region accounted for 25 percent of the exports of the smaller CEMA countries; as regards imports it accounted for 27 percent in 1970 and 34 percent in 1975; since then there has been a steady decline (1980: 28.5 percent).

The Cema countries trade involvement with the West has always been much greater than the OECD countries involvement with the East. The East European share in the foreign trade of the Western group of countries never achieved more than 3-5 percent. Admittedly there are pronounced differences between the various countries. Among the seven member countries of the so-called Western world economic summit, the FRG recorded $201 per capita exports to the CEMA region in 1980, the United States only $18. Even greater is the difference between the two national economies with regard to imports from CEMA (Ratio $188 to $6). Differences are also considerable between the FRG and France, the Western country with the second greatest Eastern trade links (per capita French exports to the East: $87, imports: $97). In this connection the FRG holds a special status from another aspect also. Its most important trading partners in Eastern Europe are the smaller CEMA countries, not the USSR.

Against the ba ckground of the differences in the links it is understandable that we find serious conflicts of interest among the OECD countries with respect to the appraisal of the economic (and political) significance of East-West trade. The most important prerequisite for an at least basically coordinated Western trade policy toward the East must be the readiness of all those involved to largely take into account these differing interests. However, the economic summit in Ottawa clearly showed that the West is still far from such an attitude. Within the framework of the preparations for the summit meeting of Western industrial countries on 20 and 21 July 1981 attempts were made to achieve agreement on the handling of East-West economic relations. Unfortunately no such agreed standpoint was produced in Ottawa. The statement put out by the heads of state and government merely says: "We arrived at the conclusion that consultations and, if necessary, coordination are required to ensure that our economic policy with regard to East-West relations continues to be compatible with our political goals and our defense... We have agreed to consult with one another so as to improve the present system for controlling trade with the USSR in the sphere of strategic goods and relevant technologies."[4]

Complementary Goods Structure

At this point we have only Soviet data on the composition of the 1980 goods trade between East and West. According to these data the structure and development of USSR exports to the West have featured mainly deliveries of hydrocarbons (oil, oil products, natural gas). Export revenues derived from this class of goods rose by a third to 11.3 billion TRbl's /transferable rubles/[5] (equaling $17.4 billion). Their share in total Soviet exports to the West thus achieved almost 70 percent (1979: 66 percent).[6] Oil continued in 1980 to hold the strongest position within Soviet energy exports to the West. Revenues amounted to 9.4 billion TRbl's (+ 26 percent). Once again the USSR profited from OPEC price policies to obtain windfall profits. The volume sold in the West declined by 4 million tons to 55 million tons (- 7 percent), the revenue (average value) per ton, on the other hand, rose by 35 percent. However, the share of oil in Soviet exports to the West stopped rising by comparison with the previous year (58 percent). Natural gas was responsible for

the expansion of energy exports (1979 export share: 7.5 percent; 1980: 11.5 percent). Revenues here amounted to almost 2 billion TRbl's and have thus nearly doubled. This result is primarily due to price increases (+ 70 percent) but also to a rise in volume (+ 13 percent). The structural change in Soviet energy exports will continue in this direction.

Soviet exports to the West of machines, vehicles and equipment declined by 13 percent in 1980; their share in total exports to the West amounted to only 2 percent (1979: 3 percent)--an indication of the chronic export weakness of USSR processing industries.

Among USSR imports, machines, vehicles and equipment continued to be the most important group of goods at 4.7 billion TRbl's (+ 3 percent), although their share had declined by 4 percent to 30 percent by comparison with 1979. A special American study discloses[7] that Soviet machine purchases in the West concentrated in the 1970's as before on goods of traditional technologies. In the period from 1970-1979 the share of high technology products[8] in finished goods exports from the Western industrial countries to the USSR never even managed to achieve 20 percent--a result which is analogous to that of East-West trade as a whole.

In 1980 the USSR purchased from the OECD countries (mainly the United States, Canada and Australia) grain to the value of more than 2 billion TRbl's (+ 3 percent). The effect of the partial American embargo on grain is noticeable both with regard to import prices for grain and the supplier country structure of Soviet imports. In 1980 the price (average value) per ton imported rose by 30 percent. American deliveries to the USSR declined from 18.5 million tons to 7.5 million tons; the volume purchased from the other OECD countries rose by 6 million tons (compared with 1979) to 10 million tons. The OECD share in Soviet grain imports declined in terms of value from almost 90 percent in 1979 to roughly two thirds in 1980.[8] This development in the country structure will reverse in future, because the embargo imposed by President Carter in January 1980 by reason of the Soviet invasion of Afghanistan was lifted in April 1981 by President Reagon for domestic reasons.

Reduced Trade Deficit

Last year the deficit in the East European balance of trade with the industrialized West was reduced by half, to $3 billion. The USSR (+ $0.5 billion) and Romania[10] (+ $0.1 billion)--though admittedly the data are not quite conclusive--were even able to earn an export surplus; Bulgaria's trade was in balance.

For the 1976-1980 Five-Year Plan period the accumulated deficit ($38 billion) was greater for all countries--with the exception of Bulgaria and Romania--than in the 5 preceding years ($23.5 billion). Measured by the cover ratio of exports to imports, though, Eastern Europe's situation in trade with the West has clearly improved: In 1976-1980 81 percent of imports were financed by export earnings; in the previous five-year plan period this rate was about 75 percent. According to ECE data[11] from Geneva, the accumulated adverse balance of East European service transactions in 1976-1980 amounted to more than $14 billion (balance of returns on capital: - $17 billion)--due to the constantly rising interest payments; balance of tourist trade: + $2.5 billion). The CEMA countries surplus from the transfer balance amounted to more than $5 billion, so that the current account of the CEMA (7)

economies with the OECD region concluded with an accumulated deficit of $47.5 billion (estimate).

The CEMA countries do not, on principle, publish their balances of payment (the exceptions are Hungary and Poland). It is therefore not known how these current account deficits were financed. It is more than likely, though, that the CEMA countries borrowing on Western financial markets was crucial. According to Western estimates the CEMA countries net debts (liabilities minus claims) in convertible currencies rose in 1980 by $5.5 billion-$6 billion (1979: $6 billion to $6.5 billion); three quarters of these new debts were accounted for by Romania and Poland. The East European debt mountain (net) ex panded to $70.5 billion-$75 billion (end of 1980); compared with 1975 this represents an increase ranging from $42 billion to $46.5 billion.

Available Western estimates on East European debts vary considerably, depending on the countries reporting. USSR debts, for example, are recorded as $7.5 billion in some instances, as $12 billion in others. For that reason it is impossible to carry out an analysis by individual countries. Due to the necessary restructuring of the Polish debt due to be repaid and current Romanian payment difficulties, East-West financial relations are at present in a tense and particularly fluid phase. In such a situation it is particularly important as soberly as possible to discuss the dominant problems. At this point in time such a discussion--and that is one of the lessons learned from the Polish crisis--must be carried on separately for each individual CEMA country, and this is not possible without adequate and detailed data.[12]

Outlook

According to available East European data[13] the CEMA countries exports to the West have risen by 1 percent in the first half of this year (Poland: - 28 percent, USSR: + 7.5 percent). In the same period CEMA imports from the West rose by 13 percent (Poland: - 21 percent; USSR: + 27 percent). Deducting the price increases, particularly high in the second half of 1980, imports have probably stagnated and exports declined. This agrees with the trend of weak business activities in the West: In real terms the gross national product of the 15 most important Western industrial countries (weighted by their share in the previous year's CEMA exports) will decline by 0.5 percent in 1981 (1980: + 2 percent). Assuming a slight business revival in the West in 1982, a 1.5 percent growth in the gross national product may be expected. This would mean that OECD imports from CEMA would also revive somewhat (2-3 percent).

At the present time the smaller CEMA economies are beset by considerable economic difficulties (declining growth rates, large debts to the West and to the Soviet Union, the need to adjust to energy shortages, and so on). It is altogether impossible to guess at future developments in Poland.[14] It is therefore highly doubtful whether these countries will be able to make use of the scope for greater exports.

The outlook for Soviet trade with the West is somewhat more favorable. Currently the Soviet Union has no trouble in meeting its payment obligations to the West so that even the (unplanned) rise in the importation of grain can be financed. Due to another most unsatisfactory harvest (estimated at 170-180 million tons), the Soviet

Union will have to import an estimated 40-42 million tons of grain in fiscal 1981/1982[15], including 23 million tons from the United States alone.[16]

In addition Soviet trade with the West will be affected in future years by the new natural gas pipe business. The Soviet Union has for some time negotiated in this matter with some West European gas supply firms. Should these negotiations be concluded this year[17]--and it looks as if they may well be--, the USSR would import steel pipes and the respective equipment valued at $10-15 billion in the course of the next 2-3 years--on a credit basis. It would repay these loans from 1985 on by natural gas deliveries (40 billion cubic meters per annum, 12 billion cubic meters to the FRG). The Soviet economy's exceptional status in East-West trade is likely to remain the same for a considerable time to come: Energy deliveries in payment of grain and technology purchases.

Up to now transatlantic differences of opinion have prevented the political framework for East-West trade in the 1980's from being put in place on the Western side. This open-ended political flank brings an additional element of uncertainty to the future development of trade relations. In the course of the ongoing discussions in the Western alliance for a consensus on trade with the East we must n ot forget that trade relations with the Soviet Union and the other CEMA countries represent an element of stability in relations between East and West Europe, which should not be frivolously jeopardized.

FOOTNOTES

1. Excluding Albania and the non-European member countries of CEMA (Cuba, Mongolia, Vietnam); including inner-German trade.

2. Data on the development of average values are available only for the CSSR, Poland, Hungary and the Soviet Union; they also relate to trade with the so-called nonsocialist world (Western industrial countries and developing countries).

3. OECD data do not include inner-German trade.

4. "The Summit Meeting of the Western Industrial Countries," EUROPA ARCHIV No 16, Series 1981, pp D 421ff.

5. The TRbl is the common foreign exchange unit of the CEMA countries. Its computed value, determined by an official and purely fictitious gold content (0.987412 gr); amounted to $1.53 in the year under review.

6. Last year the increase in foreign exchange revenues from Soviet energy exports amounted to 2.8 billion TRbl's; this amount corresponds to more than 51 percent of the total exports to the West of all CEMA countries.

7. U.S.Department of Commerce, International Trade Administration: "Quantification of Western Exports of High Technology Products to Communist Countries," Washington, January 1981.

8. Involved here is a list of 4-5 place SITC items assumed to represent the most modern technologies.

9. Last year the USSR imported a total of 30 million tons of grain, including 12.5 million tons (valued at 610 million TRbl's) from Argentina.

10. Romania's payment difficulties evidently did not arise in trade with the OECD countries. They were caused by the deficit in trade with OPEC. In 1976-1979 this amounted (accumulated) to 1.5 billion TRbl's (more than $2 billion); another deficit--amount hitherto unknown--must be added for 1980.

11. See "Economic Survey of Europe in 1980," New York 1981, p 180.

12. Not very helpful in this connection is a study recently presented by the Vienna Institute for International Economic Comparisons (Gerd Fink: "An Assessment of European CEMA Countries' Hard Currency Debt," research report No 72, September 1981). This extrapolates the debts of the various CEMA countries, based on four different assumptions ("old elasticities," "base scenario," "low OECD growth scenario," "high interest scenario") to 1985-1990. However, nothing is said about the likelihood of these assumptions, and this precisely would be crucial for appraising the future creditworthiness of the various debtor countries. Moreover, the assumptions are so broad that error is excluded; the results of the extrapolation range for 1985 between $90 billion (best case) and $138 billion (worst case), for 1990 between $30 billion and $264 billion (at prevailing prices).

13. From Bulgaria, the CSSR, Poland, Hungary and the Soviet Union.

14. In 1982 the Polish Government expects exports to increase in convertible currencies by 9.5 percent and imports in convertible currencies by 2.5 percent, so that the balance of trade will be equalized.

15. In its efforts to obtain more sources of supply outside the United States, the USSR concluded a grain agreement with Canada. This provides for Canada to deliver at least 25 million tons of grain to the USSR from August 1981 to July 1986.

16. The 1975 U.S.-Soviet grain agreement, set to expire in September last, was extended by another year; it permits the Soviet Union to purchase up to 8 million tons of grain in the United States without special permits. It is interesting that this agreement, allowing for the orderly process of Soviet grain purchases, was concluded without any political strings and has now been extended.

17. The Reagon Administration, though, has not yet abandoned its reservations with regard to this transaction. From the American point of view this is not contradicted by the fact that the United States recently granted an export license to Caterpillar for supplying 100 pipelaying machines to the USSR (valued at $40 million). It seems to be U.S.strategy to do everything possible to prevent the completion of the Siberian gas pipeline or at least delay it. If this does not succeed, the 1979 export control legislation will be so interpreted as to enable American firms to enter into aggressive competition with European and Japanese producers of pipeline equipment (see FRANKFURTER ALLGEMEINE ZEITUNG, 16 October 1981).

Table 1--Development of the CEMA Countries Trade with the West[1]

(3)	Ausfuhr[2]						Einfuhr[2]					
	1970	1975	1977	1978	1979	1980	1970	1975	1977	1978	1979	1980
	(4) Mrd. TRbl[3]											
(5) Bulgarien	0,26	0,35	0,48	0,53	0,93	1,08	0,32	0,96	0,74	0,79	0,88	1,06
CSSR	0,78	1,17	1,37	1,47	1,79	2,18	0,82	1,57	1,87	1,99	2,30	2,48
(6) DDR[4]	0,80	1,69	1,84	1,95	2,34	2,57	1,17	2,45	2,52	2,77	3,72	4,11
(7) Polen	0,91	2,42	2,82	3,15	3,53	4,04	0,84	4,63	4,65	4,60	4,56	4,51
(8) Rumänien	0,54	1,39	1,62	1,86	2,49	2,86	0,70	1,68	1,93	2,38	2,64	2,77
(9) Ungarn	0,59	0,95	1,27	1,33	1,72	1,76	0,67	1,41	1,80	2,16	2,18	2,35
(10) RGW(6)	3,90	7,97	9,40	10,29	12,80	14,89	4,52	12,70	13,81	14,69	16,28	17,30
UdSSR	2,71	6,17	8,07	8,79	12,88	16,19	2,57	9,75	10,64	11,24	13,34	15,83
(11) RGW(7)	6,11	14,14	18,27	19,08	25,68	31,08	7,09	22,45	24,45	25,93	29,64	33,13
	(12) Veränderung gegenüber dem Vorjahr in vH											
(5) Bulgarien	+ 10,1	+ 3,0	+ 3,4	+ 8,9	+ 76,6	+ 16,1	+ 38,0	+ 40,7	- 4,7	+ 6,7	+ 10,5	+ 23,7
CSSR	+ 9,4	- 6,0	+ 13,9	+ 8,2	+ 20,9	+ 21,8	+ 26,0	+ 2,0	+ 6,4	+ 6,8	+ 15,4	+ 7,9
(6) DDR	+ 7,8	- 5,3	- 10,4	+ 5,9	+ 19,8	+ 27,0	+ 32,1	- 0,4	- 9,8	- 1,8	+ 34,7	+ 10,5
(7) Polen	+ 19,2	+ 9,0	+ 6,6	+ 11,8	+ 12,2	+ 14,5	+ 4,2	+ 17,2	- 8,5	- 1,0	- 1,0	- 1,0
(8) Rumänien	+ 20,2	- 8,8	- 1,4	+ 14,7	+ 33,7	+ 15	+ 5,1	- 13,1	+ 16,5	+ 23,3	+ 10,9	+ 5
(9) Ungarn	+ 22,5	- 8,8	+ 8,3	+ 4,6	+ 30,8	+ 2,2	+ 42,2	+ 3,5	+ 17,9	+ 19,9	+ 1,0	+ 7,8
(10) RGW(6)	+ 29,8	- 8,5	+ 2,3	+ 9,4	+ 24,4	+ 16,3	+ 19,8	+ 7,5	+ 1,0	+ 6,4	+ 10,8	+ 6,3
UdSSR	+ 4,7	- 2,4	+ 12,5	+ 8,9	+ 45,6	+ 26,5	+ 11,5	+ 57,4	+ 4,9	+ 5,7	+ 18,7	+ 18,5
(11) RGW(7)	+ 14,4	- 1,6	+ 7,0	+ 4,4	+ 34,2	+ 21,4	+ 16,2	+ 24,7	- 2,6	+ 6,1	+ 14,3	+ 11,8
	(13) Westhandelsanteil (Gesamtausfuhr bzw. -einfuhr = 100)											
(5) Bulgarien	14,2	10,1	10,5	10,3	15,8	15,8	19,1	23,8	15,9	15,2	15,5	17,1
CSSR	20,4	20,0	18,9	18,5	20,4	21,8	24,9	28,8	23,6	23,4	24,3	24,4
(6) DDR	21,9	22,5	20,5	19,7	20,8	24,2	26,7	29,0	26,4	25,5	30,8	30,5
(7) Polen	28,4	31,5	30,7	31,3	31,2	34,6	25,9	49,5	42,5	40,2	37,3	38,4
(8) Rumänien	32,3	35,0	31,0	33,7	28,1	35,1	40,4	42,2	36,9	39,1	36,1	39,1
(9) Ungarn	28,4	27,3	27,1	27,5	24,7	22,3	29,6	28,4	28,9	30,1	28,3	28,5
(10) RGW(6)	24,0	24,3	22,9	23,1	25,2	26,2	27,2	34,2	30,3	29,6	29,9	28,7
UdSSR	19,1	25,7	26,7	24,6	30,2	32,6	24,3	36,6	34,6	32,3	35,3	35,6
(11) RGW(7)	22,0	24,9	24,6	23,8	27,5	29,2	26,1	35,2	32,0	30,8	32,1	31,4

(14) Anmerkungen für 1980 vorläufig, für Rumänien geschätzt.

(15) 1)RGW-Länder.-2)Wertstellung fob, Ungarn Einfuhr cif. Generalhandel. Einkaufs- und Verkäuferland. UdSSR und Ungarn (ab 1971) Herkunfts- und Bestimmungsland.-3)Der Transfer-Rubel ist die Außenhandelswährungseinheit der RGW-Länder; sein rechnerischer Wert betrug bis 1971: 1,11 US-$, 1975: 1,39 US-$, 1977: 1,36 US-$, 1978: 1,47 US-$, 1979 und 1980: 1,53 US-$.-4)Sogenannte kapitalistische Industrieländer (Gruppenzuweis).

(16) Quellen: Außenhandelsstatistiken der RGW-Länder; Berechnungen des DIW.

Key:

1. Exports[2]
2. Imports[2]
3. CEMA Countries[3]
4. Billion TRbl's
5. Bulgaria
6. GDR[4]
7. Poland
8. Romania
9. Hungary
10. CEMA (6)

/Key continued on following page

11. CEMA (7)
12. Percentage changes compared to the previous year
13. Share of trade with the west (total exports and imports = 100)
14. Data for 1980 preliminary; estimated for Romania.
15. 1) OECD countries.-- 2) Value date: fob; Hungary imports: cief. General trade. Buying and Selling country; USSR and Hungary (from 1971): Country of origin and country of destination.-- 3) The transferable ruble is the foreign exchange unit of the CEMA countries; up to 1971 its computed value amounted to: $1.11, in 1975: $1.39, in 1977: $1.36, in 1978: $1.47, in 1979 and 1980: $1.53.-- 4) So-called capitalist industrial countries (group return).
16. Sources: CEMA countries foreign trade statistics; DIW computations.

Table 2--Data on the CEMA Countries Trade Balance with the OECD Countries

CEMA Countries	1970	1971 to 1975[1]	1979	1980	1976 to 1980[1]
	Balance in Billion $[2]				
Bulgaria	- 0.1	- 1.4	+ 0.1	0	- 1.1
CSSR	- 0.1	- 1.4	- 0.8	- 0.5	- 3.3
GDR[3]	- 0.3	- 3.6	- 2.1	- 1.7	- 7.8
Poland	+ 0.1	- 7.0	- 1.5	- 0.7	- 10.0
Romania	- 0.2	- 1.3	- 0.2	+ 0.1	- 1.3
Hungary	- 0.1	- 1.7	- 0.7	- 0.9	- 4.0
CEMA (6)	- 0.7	- 16.4	- 5.2	- 3.7	- 27.5
USSR	- 0.4	- 7.1	- 0.9	+ 0.5	- 10.7
CEMA (7)	- 1.1	- 23.5	- 6.1	- 3.2	- 38.2
	Exports as Percentages of Imports				
Bulgaria	81.3	58.3	98.3	100.0	82.7
CSSR	85.3	81.5	76.6	87.8	77.6
GDR	77.4	71.0	62.8	72.3	67.5
Poland	108.4	61.5	77.4	89.4	69.5
Romania	76.9	84.3	90.1	103.2	92.0
Hungary	88.9	72.8	79.1	75.1	72.3
CEMA (6)	86.5	70.7	77.4	85.9	74.7
USSR	85.9	79.8	95.8	102.2	88.2
CEMA (7)	86.3	74.2	85.7	93.8	80.8

Totals vary due to rounding off of figures. 1980 data are preliminary; estimated for Romania.

1) Accumulated values.-- 2) At prevailing prices and exchange rates; export surplus: +, import surplus: -.-- 3) With so-called capitalist industrial countries (group return).

Sources: Statistical yearbooks and foreign trade yearbooks of the CEMA countries.

Graph 1--OECD Countries' Exports to the CEMA Countries[1]

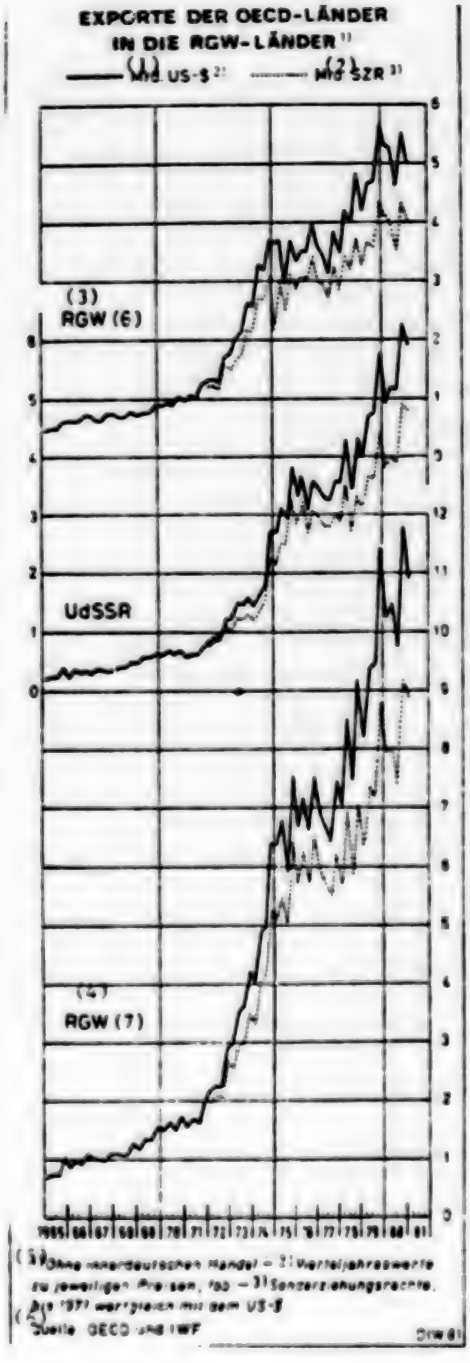

Graph 2--OECD Countries' Imports from the CEMA Countries[1]

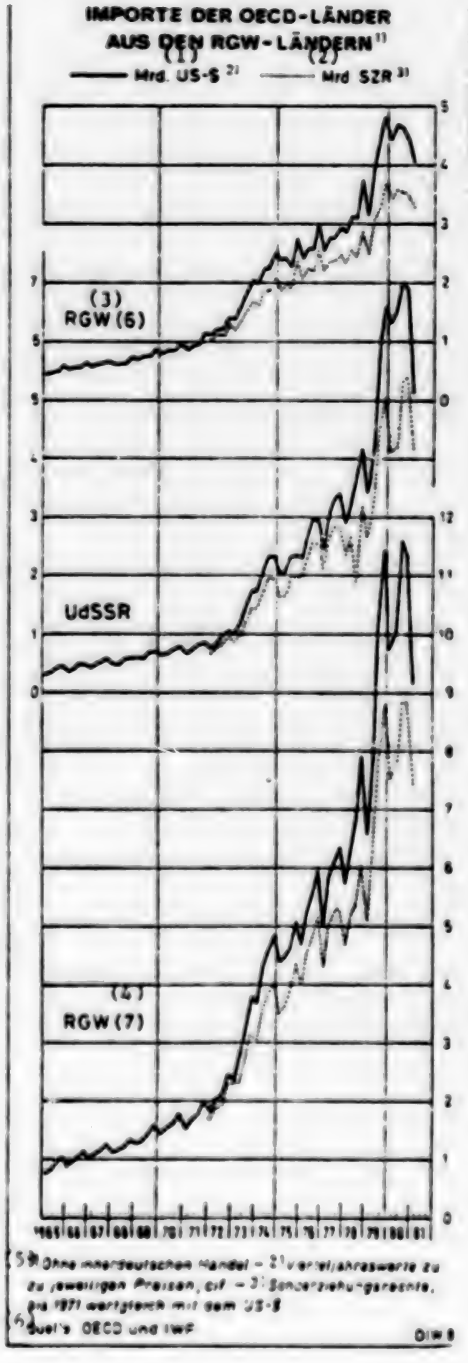

/Key on following page/

Key for graphs 1 and 2:

1. Billion $[2]
2. Billion special drawing rights[3]
3. CEMA (6)
4. CEMA (7)
5. 1) Excluding inner-German trade.-- 2) Quarterly values at prevailing prices; fob.-- 3) Special drawing rights, up to 1971 equivalent to the U.S.dollar.
6. Source: OECD and Institute for International Monetary Fund.

Graph 3--Eastern Trade Links of Selected OECD Countries in 1980

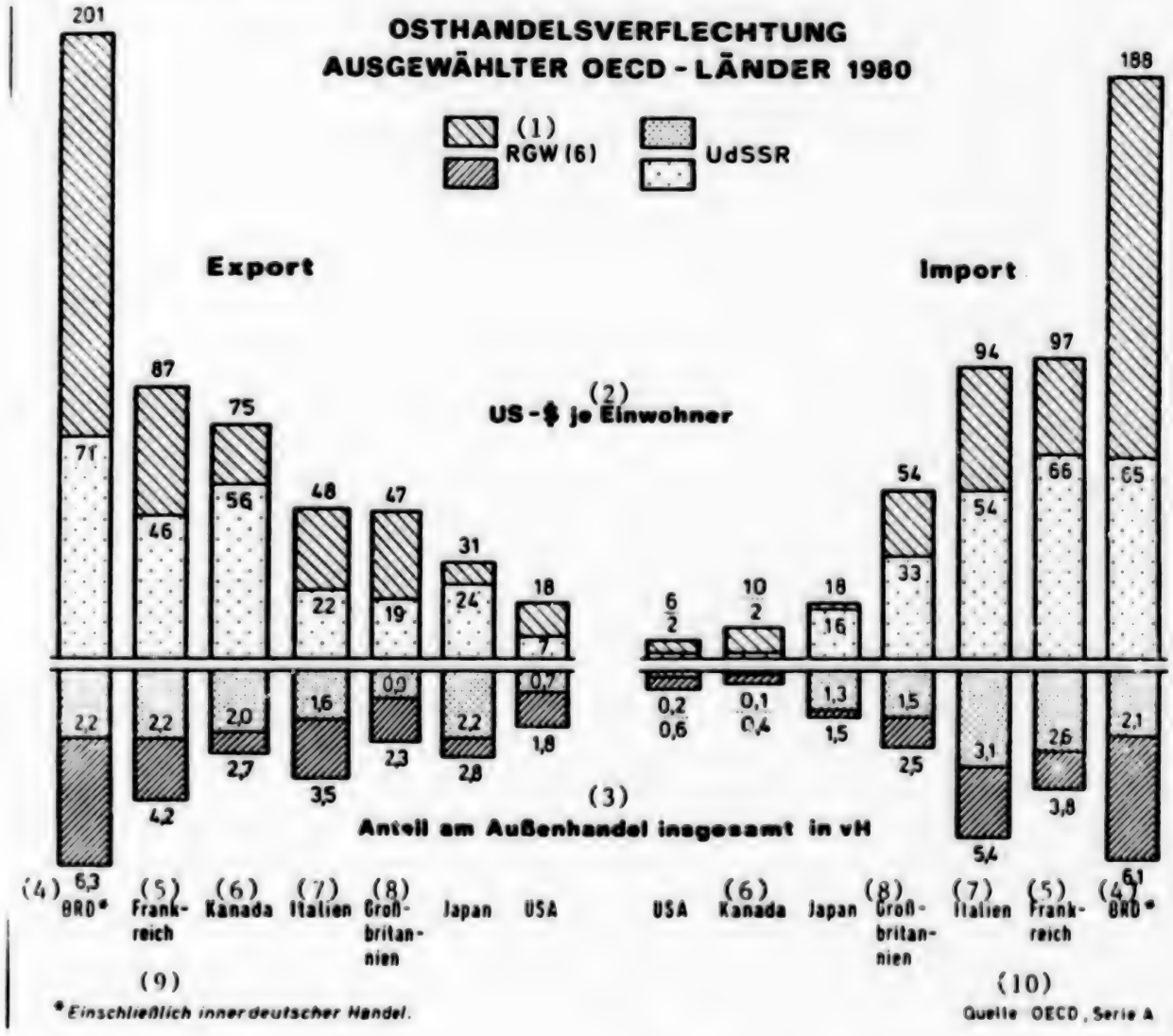

Key:

1. CEMA (6)
2. U.S.dollar per capita
3. Percentage share in total foreign trade
4. FRG
5. France
6. Canada
7. Italy
8. Britain
9. * Including inner-German trade
10. Source: OECD, Series A

Graph 4--Good Structure of the OECD Countries[1] Exports to the CEMA Countries 1961-1979

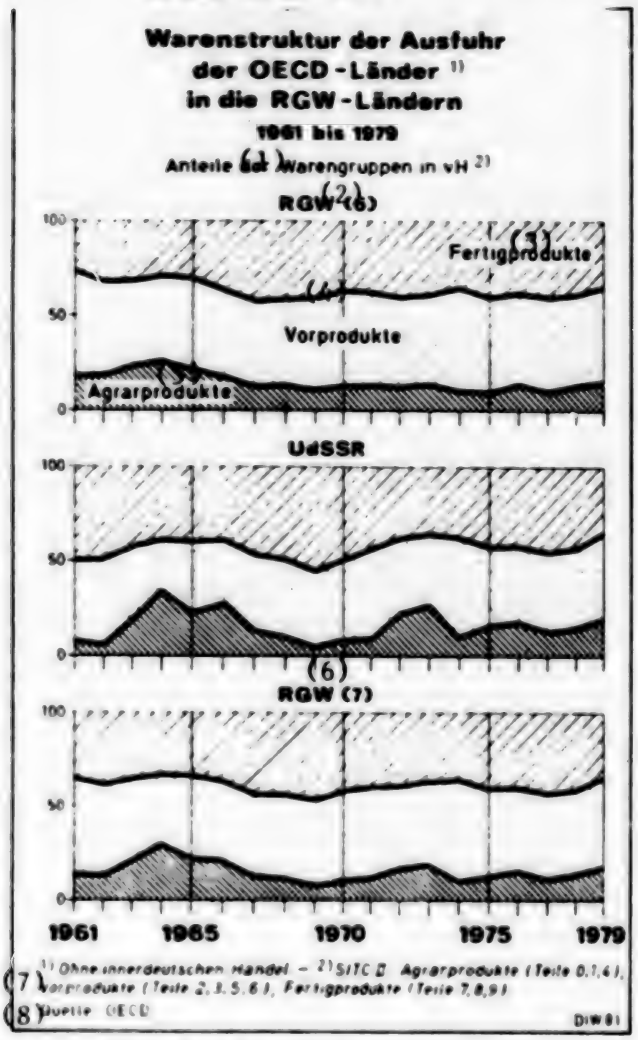

Graph 5--Goods Structure of the OECD Countries[1] Imports from the CEMA Countries 1961-1979

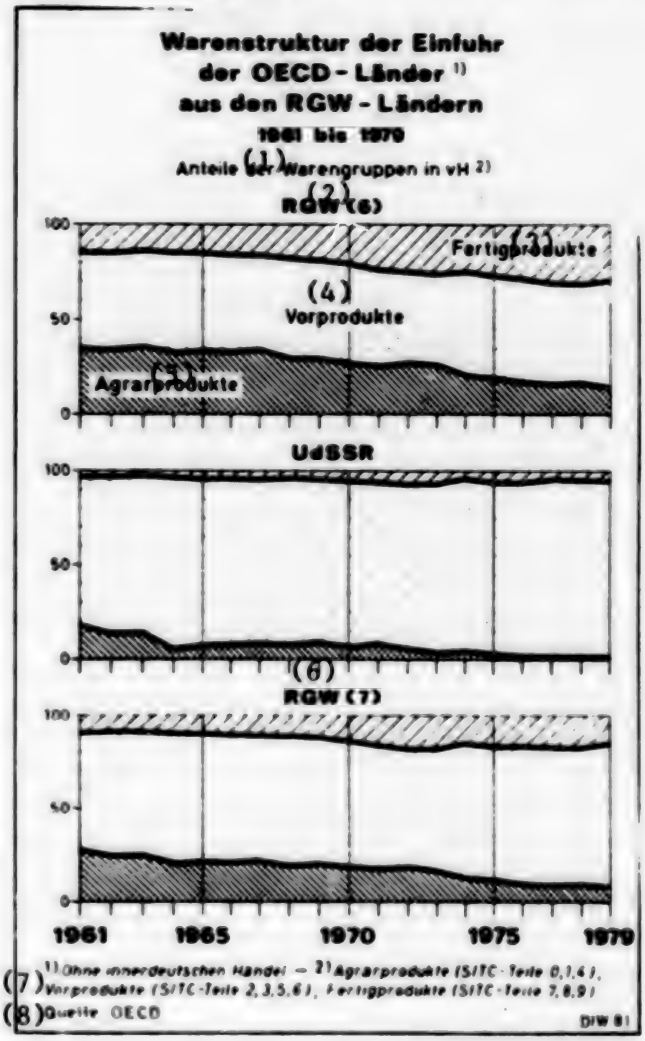

Key to Graphs 4 and 5:

1. Percentage share of the goods groups[2)]
2. CEMA (6)
3. Finished goods
4. Primary products
5. Farm products
6. CEMA (7)
7. 1) Excluding inner-German trade.-- 2) Farm products (SITC Parts 0,1,4), primary products (SITC Parts 2,3,5,6), finished goods (SITC Parts 7,8,9).
8. Source: OECD.

11698
CSO: 2300/161

YUGOSLAV-HUNGARIAN TRADE, ECONOMIC COOPERATION

Belgrade EKONOMSKA POLITIKA in Serbo-Croatian 1 Feb 82 p 30

[Text] A protocol on commodity trade between Yugoslavia and Hungary in 1982 was signed in Belgrade last Friday. It calls for a considerable increase over last year--29 percent more than actual trade and 7 percent more than the trade planned, so that the value of Yugoslav exports will reach $330 million and the value of imports $345 million. When the value of services is added to this ($65 million in services offered by Yugoslavia and $50 million by Hungary), a balanced amount of $395 million is arrived at on both sides.

Among the more important items are machines and equipment (Yugoslav exports and imports of $77 million each), metallurgical products ($23.3 and $36.5 million, respectively), chemical and pharmaceutical products ($79.1 and 93 million, respectively), products of the wood and paper industry ($38.7 and $26.5 million, respectively), coal ($30 and $17 million, respectively), Yugoslav exports consisting mainly of processed Hungarian coal, nonmetallic minerals and building materials ($8 and $10 million, respectively), consumer goods ($15 million in each direction), and farm products and processed foods ($20 and $25 million, respectively), while $25 million for each side is envisaged for local border trade.

Though the increase is fair in size, it should be borne in mind that the year it is being compared to is one in which the plan was not fulfilled, but fell short by about 15 percent. This does not mean that one has to be dissatisfied with the results of trade in 1981, especially in view of the situation in the world economy and also in view of the difficulties of the two economies, but rather that last year's plan was overambitious. Visible trade exceeded a value of $520 million, which is more than actual achievement in 1980, and by and large it was in balance. The value of trade reached about $620 million when services were included, and once again it was basically in balance.

This year's plan, though it seems to us that it does not exhaust all the possibilities, will not be easy to fulfill in view of various international and national circumstances. Certainly the very favorable political atmosphere in relations between the two countries should be supplemented by development of relations in other areas as well, among which the economic area certainly takes first place. There is room, at the moment perhaps not so much in direct visible trade as in the domain of industrial cooperation, services and the like.

Cooperation in the sector of agriculture is promising. First of all in this area there is the arrangement with the Danube-Tisa-Danube SOUR [Complex Organization of Associated Labor] involving $65 million. The Hungarians would like to finance production in Yugoslavia and to receive payment in the form of the surplus of products which would result from the investment. This would be suitable to the Yugoslav side if the other side, which by and large would be delivering machines and equipment, would agree to itself taking Yugoslav machines and equipment in a certain percentage, and not exclusively food. Similar arrangements might be concluded with the Beograd Agroindustrial Combine, Agroslavonija and also in Macedonia, in Kosovo....

Industrial cooperation is envisaged in the chemical industry. This involves cooperation in the manufacturing of chemical fertilizers at Prahovo and cooperation between Sodaso in Tuzla and Hungarian firms in the production of polyols. Cooperation is also beginning between Crvena Zastava [Red Flag Motor Vehicle Plants] and the Hungarian firm Mogurt, between Energoinvest and the firm Nikex in the production of gas boilers and exchange of electric and gas boilers, and there are other ideas as well.

Hungary might make greater use of Yugoslav services. The reference here is to rail transportation and seaports. There is room especially in the construction industry, where Yugoslavia has capabilities, excellent references abroad, including in Hungary itself, and it could even partially finance the performance of construction work. These might either be complete projects or participation in the work being done by Hungarian or foreign firms.

Finally, tourist trade could be substantially increased. It is in the nature of things that more Hungarians will always want to visit Yugoslavia than the other way about (Hungary has Balaton, but it does not have the Adriatic and so on).

7045
CSO: 2800/269

CEMA PLASTICS INDUSTRY GROWTH REVIEWED

East Berlin AU—ODR-AUSSENWIRTSCHAFT in German Vol 10 No 5, 27 Jan 82 p 14

['AU Market Information' report by Information and Public Relations Department, GDR Ministry for Foreign Trade: "Growth of CEMA Plastics Industry"]

[Text] Between 1960 and 1980 CEMA plastics production grew by more than twelvefold. The average annual production increase was 17.3 percent between 1960 and 1970, 10.9 percent from 1971 to 1974 and 7.8 percent in the last five-year plant. [See Table 1].

The CSSR and GDR achieved the highest production increase. The per capita plastics production [in these countries] amounted to 58.3 and 51.3 kilograms, respectively, in 1980 as compared with 31.6 kilograms in Bulgaria, 30.6 kilograms in Hungary, 26.1 kilograms in Romania, 16.2 kilograms in Poland and 11.4 kilograms in the USSR. CEMA countries plastics production is characterized by a low share of thermoplastic mass polymers. [See Table 2].

Plastics Production Concentration Areas

Since 1956 there has existed in CEMA the Working Group for Plastics which is subordinate to the Permanent Commission for the Chemical Industry and was renamed the Plastics Section three years ago. Consultations by specialists done within the framework [of the section] have shown corresponding successes through many initiatives. Thus, in 1973 Bulgaria, Poland and the USSR signed a cooperation agreement to develop a technological process for the annual production of 60,000 tons of suspensive polyvinyl chloride (PVC) for installations. The work on this project is in the final phase. The scientific and technical cooperation plan of the member countries also provides that, by 1985, work will be accomplished on

- improvement of the present process for production of high density polyethylenes by the suspensive method, primarily by decreasing energy intensity,
- developing domestic technologies for low density polyethylene production for facilities with an annual capacity of 100,000 to 150,000 tons,
- developing technology for production of ethylene and octanvinyl copolymers for facilities with annual capacities of 50,000 to 80,000 tons,
- developing formulas based on polyethylene and its copolymers for the production of weldable foils and
- developing improved production processes for styrene plastics.

In the evaluation made at the 25th anniversary session of the conference of plastics specialists, it was established that the work done within the framework of the Working Group — subsequently the Section — had made it possible to solve many technical individual problems.

The increase of plastics production in CEMA countries has resulted in a significant increase in the export of plastics during the last five-year plan. In 1980 total export of plastics from CEMA countries amounted to 825,000 tons (1975: 260,000). At the same time the corresponding import has remained steady at about 600,000 tons annually. The export surplus achieved since 1979 results from the beginning of deliveries to capitalist industrial countries. The USSR has had the largest exports in this regard. They result from agreements made with the FRG for the construction of two low density polyethylene production facilities (capacity: 120,000 and 240,000 tons annually, respectively) and one PVC facility (250,000 tons) as well as with France on the [construction] of a facilities complex (300,000 tons) to produce styrene and various types of polystyrene. [See Table 3].

Plastics Industry Construction Projects in Individual CEMA Countries

One factor significantly limiting an increase of plastics exports from CEMA countries is the largely unsatisfied domestic demand. For this reason a further expansion of appropriate capacities as quickly as possible is considered necessary.

The greatest construction activity is to be noted in the USSR. The applicable national economic plans provide for the production of plastics and paint resins to increase to 6 to 6.25 million tons annually by 1985 and to 8.0 to 8.5 million tons by 1990. The percentage of polymers will increase correspondingly to 45 or 50 to 52 percent. In the near future high density polyethylene plants (capacity: each 200,000 tons annually) in Prikumsk, Omsk and Shevchenko, a low density polyethylene plant (120,000 tons) in Angarsk, polystyrene plants in Omsk and Shevchenko (each 100,000 tons), a polypropylene plant (100,000 tons) in Tomsk and PVC [plants] in Zima and Kalush (each 250,000 tons) will be put into operation. The construction of a second PVC facility of the same size is planned in Zima.

In Romania the production of plastics is to be increased by 50 to 70 percent from 1980 to 1985. In the near future capacities for manufacturing plastics will be increased by putting into operation more facilities for low density polyethylene in Brazi and Navodari, high density polyethylene in Navodari, Teleajen, Timisoara and Ploiesti and for polypropylene in Midia and Teleajen. Each of these facilities has an annual capacity of 60,000 tons.

In Hungary additional facilties for plastics manufacture will be built in the near future only at the Borsod Chemical Combine. The contract signed with a Japanese firm in 1981 provides for the construction of a facility with an annual capacity of 40,000 tons of polypropylene polymers for chemical fibers with about 25,000 tons of this to be delivered to the USSR each year from 1986. Hungary, in turn, will receive 60,000 tons of ethylene annually via the Kalush-Leninvaros pipeline. This will be used to produce low density polyethylene in a new facility with an annual capacity of 120,000 tons.

In Bulgaria the first polypropylene facility with an annual capacity of 80,000 tons went into operation in Burgas in 1981. It will produce 16 different types of polypropylenes from which cellophane, carpet fibers, ship's ropes and containers in particular will be manufactured. This is one of 11 new facilities in Bulgaria's largest petrochemical works. The already existing facilities include ones for production of ethylenes, acetaldehyde and high density polyethylenes. Facilities for the manufacture of ethylene oxide and glycol, pyrolen [as published] and acrylics are to be completed in the near future.

Since the PVC production facility put into operation in Devnja in 1980 reached full production capacity (120,000 tons annually), PVC production in Bulgaria will double from 1980 to 1985. A program is being prepared to further develop plastics processing.

In the CSSR at present no major expansion of plastics production capacity is planned except for two propylene facilities, with each having an annual capacity of 30,000 tons, and intensifying polystyrene production at Kralupy nad Vltavou. The situation is similar in the Czech chemical industry overall, the production of which is to increase by 12 percent in the current five-year plan.

As early as the 1970's the CSSR began a forced expansion of its domestic plastics production so as to become more and more independent of foreign imports. Thus plastics imports dropped to 41,743 tons by 1980 (1979: 29,673; 1975: 83,262 tons). The increase of approximately 40 percent between 1979 and 1980 resulted from special agreements within the CEMA framework, especially with the USSR which almost tripled its deliveries to the CSSR as compared with 1979, and purchases of special plastics not yet manufactured in the CSSR. Here the import of plastics in 1980 amounts to less than 5 percent of domestic production. [See Table 4].

At the same time the import of artificial resins grew by 28 percent.

Table 1. Plastics Production

Year	1960	1970	1975	1979	1980
Total (x 1,000 tons)	541.7	2,669.1	4,480	6,021	6,513
Country totals					
USSR	293.0	1,479.0	2,390	2,911	3,028
CSSR	64.0	245.0	428	853	893
Romania	12.4	206.0	347	516	579
Poland	40.1	224.0	481	468	576
Hungary	9.9	55.9	123	294	328
Bulgaria	7.3	89.2	156	200	250

Table 2. CEMA Plastics Production Structure in 1980

Total (x 1,000 tons and percentage)	6,513	100.0
Categories		
PVC and copolymers	1,390	21.3
Polyethylenes	1,305	20.0
Amino plastics	909	14.0
Polystyrene and copolymers	442	6.8
Polyester resins	89	1.4
Polyacrylic resins	82	1.3
Epoxy resins	74	1.1
Ion exchangers	43	0.5
Silicons	29	0.4
Other plastics	2,168	33.2

Table 3. Foreign Trade in Plastics (x 1,000 tons)

Year	1975	1978	1979	1980*
Export	260.8	650.2	588.1	825
USSR	72.1	132.8	150.9	190
CSSR	32.0	171.1	144.4	170
Hungary	19.8	62.5	112.4	115
Import	684.8	652.6	561.6	615

*preliminary figures

Table 4. Import of Plastics and Artificial Resins (in tons)

Year	1979	1980
Total Plastics	29,673	41,743
Country		
USSR	5,574	14,233
FRG	6,045	7,232
Austria	4,750	5,979
Switzerland	6,243	5,809
Italy	1,345	1,921
Holland	1,150	1,391
Great Britain	1,549	1,086

[table continued on following page]

Total Artificial Resins	23,130	29,677
Country		
USSR	1,480	1,515
Yugoslavia	1,492	1,353
Belgium	5,893	4,422
Austria	4,123	3,202
Italy	982	1,823
Great Britain	1,329	1,411
FRG	679	1,067

8373

CSO: 2300

NEGATIVE REACTION TO NEW ECONOMIC MECHANISM IMPLIED

Sofia OTECHESTVEN FRONT in Bulgarian 29 Jan 82 p 2

[Article by Belcho Zhivkov, Hero of Socialist Labor: "On the Construction Workers' Scales." Slantlines indicate italics as published.]

[Text] Our construction brigade "Georgy Dimitrov," part of the construction enterprise number 2 at the Construction and Assembly combine in Stara Zagora, has been working for several years now on a self-accounting system. This means that the more we produce, the more we will receive. However, whether we produce more or less does not depend on us alone. Until recently we worked on apartment buildings using the broad-surface casing system. Twenty people were able to complete one hundred apartments in a year's time. We worked like "men" if we were given the chance to. Here is one example: One Monday we expected to receive a pump for pouring cement. We had made the proper arrangements, we had assigned tasks to the workers, we had secured sufficient space for work; but the pump still did not come. And this went on for a whole week. During this time /the highest-rated construction workers were doing low-rated work/, and all this happened at a time when there was a shortage of highly-rated workers. The so called "hidden stoppages" always reveal organizational weaknesses. And these weaknesses affect wages. That is why highly-rated construction workers are hard to come by; and it seems to me, that they will be even harder to come by in the future.

In the past, people lived frugally, saving the bread crumbs from the table rather than throwing them away. Poverty made them economize. Today we have learned to squander open-handedly: we lose a plywood board or a piece of cable now; tomorrow, we will throw a whole machine to rust out in the open. Bulgarians are still very frugal, but not at the construction site. I have been in the construction business for forty years, /but I have never seen a foreman or an engineer, walking in the project site, reprove someone for wasting materials/ or bend over to pick up a nail or something else that has fallen to the ground. And when the worker sees that the managers are indifferent, he will be negligent too. Neither the wage of the individual construction worker, nor the wage of the foreman is linked to the saving of materials and fuel.

We are fully aware of our weaknesses: insufficient coordination, poor supply, worsened quality of construction materials. Moreover, the wages of our workers

depend on many other people, from the designer and the engineer to the supplier, from the manager to the foreman. All this means that /the relations between separate construction brigades should become contractual/, instead of being based on good will and word of honor. The person who failed to provide the pump for a whole week (I wish the pump were the only problem) should be fined by the same percent of his wage that we lost because of his negligence. And that is precisely why a contract is necessary.

Many cranes stand idle at construction sites. We lose much because there is not a tight schedule for the use of construction machines, and because we give little thought to the fact that in the final score this affects the income of each of us. Presently, we work at a project of four decares, but we work in the same way we used to 20 years ago. When the crane comes, I begin to calculate how and where to erect it, while this should have been done by the engineers, and we should only execute. Unfortunately, there are young engineers, who have graduated with A's, but cannot calculate one supporting column ... To achieve optimal schedule of the machines, one needs much more knowledge and organizational skills.

Often, fewer people can do the work of more people. Furthermore, they can do that and achieve a better quality, even though that quality, in professions like ours, will show years later. If the foreman organizes the brigade efficiently, if the workers are highly rated and conscientious, if the control is where it should be, the people can do a great amount of work.

/rating and education are not always the best criterion/; it is the role of the brigades council to establish who deserves how much. Unfortunately, I do not recollect in my experience a case when fewer people have done a given job and have used the same wage fund...

I have heard people say, "Whether you work or not, the money is the same." We all understand the danger of this phenomenon wherever it exists. But there is something else too; sometimes the work is approximately the same, yet the wage is different. It seems to me, for example, that it is unfair that construction workers in the capital receive about 50 leva more than we do. Isn't the nature of the work the same? It is true that often one construction brigade earns more, but it is because the work organization is better, and the supply is prompt.../it seems to me that the mechanism for stimulating the workers in the construction business, and more specifically in our brigade, can be perfected/.

In the first place, the norms should be modernized; they are too old, and more importantly, they do not stimulate the quality of work. If the building is finished ahead of schedule, it does not matter that as soon as next year we will have to repair it. Together with this, it is time to find a stimulus for saving raw materials, building materials and energy. Furthermore, this should be done in such a way that the personal interest of every worker and the interest of the brigade as a collective be preserved.

9804
CSO: 2200/61

E

CSSR FINANCE MINISTER EXPLAINS TASKS OF 1982 BUDGET

Prague HOSPODARSKE NOVINY in Czech 29 Dec 81 pp 1, 8-9

[Article by Eng Leopold, Ler, ScC, minister of finance of the CSSR: "The Tasks of the State Budget for 1982"]

[Text] It was far from simple to plan the state budget for 1982 which was approved by the Federal Assembly on 16 December. In comparison with the preceding years, it involved solutions of tasks and various effects whose importance and scope are far from ordinary. The sum total of the external factors affecting our economy and of internal tasks aimed at changes in its structure calls for substantive changes in our approaches to the concept of the substance and form in the solution of significant economic problems.

The decisions of the 16th CPCZ Congress, which outlined these basic directions, demand that financial and credit policies be applied vigorously to enforce higher efficiency and intensification of production in plans and in their implementation, and to consolidate the monetary, financial and budgetary balance. The decision of the fourth and fifth plenums of the CPCZ Central Committee specify the basic policy of the 16th CPCZ Congress even further and also offer completely detailed directives for the program of the entire financial and credit system.

While drafting the state budget for 1982, the key question was how to cope with the tasks for 1981 in the financial area. It is evident that the state budget drafted for 1981--which was the first year of the Seventh Five-Year Plan--is balanced; this was made possible by the tasks aimed at higher efficiency of the management system as well as accumulation of budgetary funds in various branches in the amount of roughly Kcs 6 billion (emergency funds, the fund for improvement of transportation, etc.).

The development of our national economy during the current year deviated in several areas from its stipulated goals, which necessitated changed in the state plan and which caused a debit in the state budget amounting to Kcs 6 billion. However, our government is legally obligated to operate on a balanced budget and thus, it immediately took the necessary steps in that direction. Budget funds for investment and other purposes could not be fully exploited and in the second half of 1981 measures for more rigorous management were adopted. Some budgeted incomes were exceeded due, among other things, to the effect of adjustments in the prices of propellants. For that reason, we may anticipate on the whole a balanced budget for 1981 again. However advantageous this achievement, it cannot be overestimated in terms of achieved efficiency and economy.

Principles of Budget Policy

Once we recognize the role of qualitative changes in our economy in the 1980's--unlike in the 1970's and the initial experience in 1981--we can draft our financial and budgetary policies for the nearest period, including 1982.

First of all, we proceed from the principle that the state budgets must be planned and implemented as balanced budgets. This does not mean a narrowly cash-register point of view or a "fiscal" approach. In accordance with the general economic strategy, the entire system of financial planning must promote and stimulate all tendencies toward a balanced economy, suppress all causes of a scissorlike action between the created assets and their internal use, with the emphasis on a higher share of domestic resources in financing our national economy to the debit of foreign resources.

Therefore, in its internal concept a balanced budget must proceed from preference for exports before imports and from measures targeted at a more balanced domestic market; by the same token, it must steadily improve the efficiency and utility of expended investment funds (which must be cut unconditionally below their current level), and develop better inventories and comprehensive economic management when using social resources.

Budget policies must help develop all factors of an intensive national economic growth and adopt a more aggressive attitude to every tendency and expression of extensiveness. Specifically, it is imperative to enforce improvement of all factors which raise profitability of production assets--growth of outputs while cutting costs and increasing profits, better utilization of fixed assets and cash, higher quality of production, more advantageous correlation of foreign and domestic prices, a higher share of sciences and technology in improving efficiency and outputs and so on.

When planning and implementing the state budgets, the principles of improving the planned management system must be fully applied. The contents and specific objectives of the state budgets must support without any reservation the principle of merit and the development of khozrashchet principles of management.

Budget policies must also comprehensively enhance good stewardship as an indelible trait and principle of socialist man.

Proportions and Structure of the Budget

The above-mentioned principles are reflected in the proportions, structure and tasks of the state budget for 1982. The volume of incomes and expenditures of the state budget of the Czechoslovak federation amounts to Kcs 176 billion, the state budget of the CSR is Kcs 161 billion, and the state budget of the SSR is Kcs 83 billion. The volume of the budgets of national committees equals Kcs 95 billion.

The entire budget system is based on balanced incomes and expenditures in general as well as in individual sections of the budget, which is the result of goal-oriented and general grants. Such grants allocated from the state budget of the Czechoslovak federation to state budgets of the republics total Kcs 114 billion, of which Kcs 67 billion are grants to the state budget of the CSR and Kcs 47 billion to the state

budget of the SSR. The budgets of the national committees receive grants from the state budgets amounting to Kcs 58 billion, of which Kcs 39 billion to the national committees in the CSR and Kcs 19 billion to the national committees in the SSR. Total budget incomes and expenditures are 1.6 percent up.

The share of internal incomes used to cover budget expenditures increased within the budget system, which reflects the mobilization of internal resources in our national economy. The structure of incomes and expenditures of state budgets remains basically unchanged.

The following share in incomes (=100 percent):

taxes paid by economic organizations	42 percent
sales tax and differentials from the domestic market	32 percent
taxes aid levies paid by the population	14 percent
taxes from financial and insurance systems	3 percent
other incomes in the budget sector	9 percent

The following share in expenditures (= 100):

investment and noninvestment grants to economic organizations	21 percent
noninvestment costs of social services and activities for the population	44 percent
expenditures for the defense and security	7 percent
other expenditures of the budget sector (for example, the costs of investments in the educational and health systems, culture, administration, grants for technological development, etc)	28 percent

Four-fifths of the increment in budget incomes is derived from higher taxes paid by economic organizations. The increment in expenditures is earmarked primarily to advance the development of social consumption and to raise certain grants related to the living standard of our population. The expenditures for state administration were cut.

Attitudes Toward Economic Organizations

The total effect of the state budget depends on a decisive factor, namely, the attitudes toward economic organizations whose tasks for 1982 are focused mainly on mobilization; to fulfill them we must take advantage of every direct and indirect opportunity in the management of individual areas in the process of replacement.

On the basis of processes occurring within our own economy (without any foreign intervention), the active difference of taxes and grants of economic organizations is up by Kcs 5.77 billion, i.e., 10.4 percent above 1981, which was made possible by taxes on economic profits, up almost 9 percent; by social security contributions, up by 1 percent; by taxes on depreciation, up 33 percent; while certain taxes (on receipts, costs and funds) were slashed. On the other hand, investment grants are cut more than 4 percent and noninvestment grants remain unchanged.

Nevertheless, if we consider the external factors as well, the abovementioned increment of resources from economic organizations is reduced by Kcs 3.23 billion

due to the deteriorated relations between foreign prices and domestic wholesale prices in exports and imports.

Behind these general figures we must discern a very specific complex of problems concerning the growth of outputs and profitability and consolidation of the merit and khozrashchet principles. With a 0.3 percent increase in the outputs of economic organization, profitmaking will be up 2 percent. Therefore, 65 percent of the overall increment of profits may be achieved by cutting costs, although in recent years one-half of the increments of profits was derived from reduced costs and the other half from higher outputs.

The center of gravity is in lower material costs (down by 0.94 percent) of which, however, about 50 percent will be "consumed" by a higher rate of depreciation (we have not created any corresponding increment of the outputs for the growing fixed assets). The share of wages has deteriorated moderately and the share of financial costs increased significantly (due mainly to the escalating volume of the interest rate as well as due to higher contributions to the funds for technological development, etc).

The profitmaking plan poses considerable demands, especially if we consider the fact that special profits may not reach the same level as in 1981, and that it is necessary to curtail the growth of foreign prices in import costs of a great many raw materials and materials, and to use savings to cover a part of the price increase for propellants, the annual 2 percent hike in wholesale prices of fuels and power, and so on.

The Set of Measures furnished certain tools for that purpose by focusing economic incentives on the main factors in the growth of efficiency, particularly on reduction of material costs, on the amount of disposable profits, on efficient exports, on utilization of production assets and on a higher share of technically advanced products of top quality.

We Need Norms of Quality

This particular situation compels us to improve immediately and substantially the norms and the norm base. Without norms, without their improvement and without standards representing a "scale" of demands for better stewardship, one could hardly speak of real, measurable and deserved achievements. Without norms one cannot seriously discuss the development and consolidation of khozrashchet in the VHJ [economic production units] and enterprises and especially the development of enterprise subdivision khozrashchet which represents the best way to uncover internal resources in enterprises and which is unthinkable without norms of quality because both tasks and evaluation of achievements and rewards are determined on the basis of norms.

In mutual relations this will help economic organizations achieve higher financial independence. The VHJ and enterprises will finance their own needs from their disposable assets (this share is up 2 percentage points) to a greater extent than in 1981.

This is reflected to a significant degree in such an important factor of economic incentives of enterprises as the fund for development. The allocation from profits to the fund for development is almost 12 percent above 1981 and the share of profits

to cover investments financed from the fund of development has been raised from 31 percent in 1981 to 37 percent.

The grant to organizations for revolving funds were reduced by almost Kcs 1 billion (50 percent) in view of the need to improve the development of supplies, to speed up their turnover and to upgrade their structure. After several years of slower turnover of supplies in industry and construction, the plan calls for its acceleration by 0.8/day. The importance of this potential resource is confirmed by the fact that just to maintain the turnover of supplies achieved in 1977 (far from the best year) would require, under the conditions of 1981, industry and construction to operate with supplies reduced by Kcs 10 billion, which would not fail to be reflected in the generally improved efficiency of our economy and of our domestic and foreign trade. Several measures were adopted in support of this effort, such as differentiation of the 6 percent uniform interest rate in the range from 4 to 8 percent according to the efficiency of the management; all unnecessary supplies ascertained by the bank will be subject to a rate raised by 2 percentage points.

Profitability of production assets is set at 4.6 percent--somewhat higher than in 1981, because production assets have been growing faster than profits.

The fund for cultural and social needs will be subsidized from profits with Kcs 3.65 billion, i.e., at the same level as in 1981, which will make possible further vigorous stimulation of work teams in enterprises and plants toward the fulfillment of important qualitative tasks of the plan by maximizing labor efforts and initiative.

The other most important financial resource of our society in the development of our national economy is the sales tax, which is planned at Kcs 87.6 billion, with an increment of more than Kcs 1 billion; its fulfillment reflects the problems facing our domestic market. Its purpose is to take advantage of every opportunity in direct and indirect management in order to innovate the line of consumer goods more expeditiously, in the desirable structure and quality as well as with consideration of the changing income of our population.

Effect on Science and Technology

Scientific and technological progress affects economic efficiency more than ever before. Here again financial and budget policy, along with broader application of khozrashchet principles and economy, must support more and more scrupulous implementation of scientific technological development as the fulcrum of all our activities focused on vital tasks.

Noninvestment expenditures for the development of sciences and technology will amount to Kcs 17.4 billion, of which Kcs 6.7 billion will be covered from the state budget. A major part--10.7 billion--will be financed from internal resources of economic organizations.

The general scope of funds allocated for scientific and technological development in relation to national income and the share of the state budget correspond with the statistical data of advanced industrial states. In accordance with the tasks articulated in the Set of Measures, however, the funds expended for scientific and technological development must be increasingly more related to its economic results and finances and other economic tools must affect the entire cycle--research-development-production-consumption--and its acceleration from the perspective of the greatest economic effect.

Nonproduction Consumption

The entire complex of national economic problems is inevitably also reflected in the vast area of nonproduction consumption which represents a major part of our population's living standard. In conjunction with the opportunities to benefit from the national income, it was stipulated that noninvestment expenditures in this area remain basically on the same level as in 1981, except for social security, a wage increase in this area in accordance with the plan, a 6 percent increase in costs of pharmaceutics and national defense and security. Costs of administration have also not been raised.

The total volume of noninvestment expenditures for social services and activities to the benefit of our population will amount to Kcs 134.9 billion

Noninvestment exp nditures of state budgets for social consumption in 1982

	1982 in Kcs billion	Increment 1982/1981 in Kcs billion	Index 1982/1981 in percent
Total	134.84	2.85	102.2
of which:			
- social security	74.12	2.02	102.8
- educational system	22.58	0.27	101.2
of which:			
wage funds	12.38	0.26	102.1
- health care	21.15	0.50	102.4
of which:			
wage funds	8.83	0.18	102.1
drugs and special medical materials	5.31	0.30	106.0
- culture	3.61	-	100.1

In view of the existing volume of funds for material expenditures, it will be necessary to increase the outputs in the educational system and health care, which makes considerable demands on the economic management. At the same time the quality of their operations must not deteriorate.

Especially important is direct participation of the state in the development of our agriculture due to the specific character of world food markets and to the superior role of food in the consumption of our population. Therefore, a vital part of the set of measures for improving the planned management system in agriculture beginning with 1982 involves increasing of overall funding of agriculture from societywide assets at Kcs 2.9 billion annually. Such funds are designated to consolidate the financial economic situation of agricultural enterprises and, thus, to facilitate operations based on the khozrashchet principles in more enterprises and at the same time, expansion of the production of such foods which thus far have not been profitable enough and, therefore, frequently ignored.

The proposed budget for housing construction in 1982 proceeds from the proposal of the material plan. It is envisaged that in 1982 a total of 101,200 housing units will be completed in all types of new construction projects in the CSSR. Scheduled

for completion are 20,200 housing units in communal construction, 5,150 housing units in enterprise construction, 42,850 housing units in cooperative construction, 33,000 housing units in private construction, and 2,892 housing units are earmarked for remodeling.

Expenditures of state budgets for housing construction and housing management total Kcs 22.3 billion (basically on the level anticipated for 1981), of which Kcs 12.2 billion for investment costs of housing construction, Kcs 2.9 billion in costs for state contribution to cooperative housing construction and Kcs 1.1 billion for private housing construction. Enterprises of housing management will receive compensation for losses in the amount to Kcs 4.47 billion, i.e., an increase of 3.2 percent. Compensation for shares in cooperative stabilizing construction (according to new regulations) will total Kcs 560 billion.

Grants for the operation of municipal mass transit amount to Kcs 2.6 billion, or 6.6 percent more than in 1981.

Fight against Waste

The state budgets and the whole system of financial planning must enforce more vigorously improvement in economic management. Naturally, such problems must be dealt with in principle in the plan for capital investment by strict import regulations, goal-oriented programs for conservation of fuels, energy, metals and raw materials, implementation of better economic measures, etc. Even in those areas, however, opportunities for effective budgetary financial policies have not been totally exhausted and their efficiency must be further reviewed and improved by introduction of the Set of Measures. For instance, in order to put more pressure on observation of the limits stipulated for the consumption of petrochemical products, a surtax to be introduced will amount to 3 to 5 times the price over the exceeded limit.

By the same token, it is imperative to consolidate good management in the state and budget areas, to fight against inexpedient, unproductive costs and against any kind of waste. Poor management appears in various forms: waste of financial and material resources, enforcement of personal and local interests to the detriment of societywide assets, unnecessary ostentation, an indifferent attitude toward the destruction of our national property. Those are some of the examples of the more conspicuous forms of poor management, which also includes wasteful conduct of various programs, superfluous interrelations and inefficient deployment of workers. In the final analysis, a common denominator of all that characterizes poor management is the fact that society as a whole suffers from it, that its assets which should serve its development and welfare are wasted and thus, also the endeavor to create such assets is in vain.

To consolidate a highly efficient economic system of management, the government adopted several measures which have already brought some positive partial results. For example, in 1981 the staff of employees in organizations of state administration was 5 percent below the situation in 1979. The number of employees was cut in other fiscal organizations as well. Measures aimed at more rational operation of automobile transportation for business purposes were adopted, thus gasoline consumption, use of automobiles and the number of professional drivers were reduced. The costs of propaganda and representation and other nonproductive expenditures were reduced.

Program of Economic Management

Nevertheless, the measures to consolidate economic management must not be interpreted as a one-shot action or as a campaign to be repeated once in several years. Nothing but a systematic approach and a long-term concept thoroughly implemented year in and year out will bring success. In this spirit the Program of Economic Management in the Seventh Five-Year Plan was drafted and discussed by our government.

In specific measures we proceed from the premise that the number of employees in the management and administration sector remains disproportionally high despite the measures implemented over the past 5 years. Our task is to reduce the number of employees before the end of 1985 by 10 to 20 percent on a differentiated basis, i.e., by 60,000 to 70,000 employees in the administration.

Economic incentives will lend support in the outlined tasks so that those workers who set example to others and who contribute more to the benefit of our society receive higher rewards from a part of the wage funds saved.

Other measures were adopted for better economy of automobile transportation for official purposes. We are interested in more advantageous use of our automobile fleet in 1982-1985 and thus, in 10 to 30 percent reduction of additional official passenger cars according to specific conditions of individual branches as compared with the level planned for 1981, in lower consumption of gas and more economic automobile transportation in general.

The envisaged reduction of nonproductive costs in organizations and more economical expenditures of certain costs in foreign relations will save us foreign exchange. Furthermore, areas have been identified where the efficiency of certain budget expenditures will be reviewed and on that basis specific measures will be adopted.

Unproductive costs will be further reduced and financial management will be more rigorously controlled, whether it concerns travel expenses, various non-employment rewards, organization of various conferences, aktivs and other undertakings of that kind, and all other nonproductive expenditures, including foreign expenditures.

Measures concerning administrative operations are focused mainly on the process of simplification in the system of planning, accounting and statistical records, utilization of computer technology and overall simplification of the regulations in force.

Consolidation of Financial Discipline

Our struggle for higher efficiency must be narrowly tied with consolidation of planning and financial discipline.

On the basis of current financial control and audit, additional taxes to the state budget during the Sixth Five-Year Plan amounted to Kcs 3.8 billion, of which nearly Kcs 1 billion represented penalties. Periodical audits disclosed additional shortcomings.

Among the most frequent grounds for financial penalties were incorrectly documented or delayed taxes to the state budget, incorrect use of financial assets (for example,

for investments, improper use of funds for technological development, etc.), distortion of economic results, etc.

Financial audit and control must be improved according to the decisions issued by the statewide aktiv of the financial administration in June of 1981.

Financial administrations will focus their future operations so that increasingly better forms and methods be used to achieve effective control of incomes paid to state budgets and so that the grants from the state budgets be justified and efficient. This means focusing mainly on the aspect of quality in the fulfillment of planned tasks in the VHJ and individual enterprises, pinpointing main economic problems of organizations in order to search for the roots of their shortcomings, and endeavoring to eliminate them, and thus, helping to render the management and creation of resources more efficient.

Analyses of economic operations and their application in enterprise and intraenterprise management should correspond to the tasks facing our national economy in 1982.

Analyses of economic management for 1981 which are now being compiled in enterprises and VHJ should further concentrate on higher objectivity, criticism and efficiency. Indicators decisive for evaluation and completion of results of economic operations in organizations and stipulated by a superior authority, especially indicators stipulated for control and evaluation of the fulfillment of the plan, must be met in 1981.

Nevertheless, it is not enough to penalize organizations which fail to meet their assigned tasks; specific conclusions must be drawn from the analysis of unfulfilled tasks and necessary measures must be taken to remedy the situation and to eliminate the ascertained shortcomings.

The state budget approved for 1982 will be translated into new wholesale prices in force as of 1 January 1982. The anticipated movement and rise of world prices of raw materials, the envisaged development of contractual prices, particularly of crude oil, and the estimated development of costs in individual branches up to 1985 are projected in wholesale prices valid as of 1 January 1982. An important purpose of the new wholesale prices is to render economic calculations more realistic and to exert, on their basis, pressure to reduce the consumption of materials, particularly of fuels and energy.

As follows from the outlined tasks of the 1982 state budget, the work of financial authorities enters a qualitatively more complex stage which calls for necessary demonstration of initiative in searching for, and finding, new solutions and for adequate improvement of methods and style of labor itself.

The current economic situation, however, demands more than further improvement of the techniques applied in the management of financial relations and application of modern data processing systems. It calls mainly for sophisticated, creative thinking by our financial personnel--in other words, for a strict, logical concept of economic laws, comprehensive utilization of economic calculations in order to achieve better economic effects and efficient management in general, and for application of financial analyses, control techniques and other advanced methods of operation.

The application of the abovementioned principles is indivisible from involved work and political activity. The employees of our entire financial system must approach the new, demanding tasks of the budget in 1982 with considerable political responsibility and expertise.

9004
CSO: 2400/109

BANK MONETARY POLICY TO STIMULATE EXPORTS

Prague NOVA MYSL in Czech No 12, 1981 pp 15-27

[Article by Jan Stejskal: "Bank Monetary Policy at Present Stage of Development"]

[Text] Relying on the experiences of the Soviet Union in building socialism, the CPCZ and Czechoslovak socialist state purposefully make use of the state socialist bank monopoly and of specific bank tools for the socioeconomic transformation of our society.

The Czechoslovak State Bank and the entire bank system discharge their responsibilities and fulfill their tasks in the national economy in accordance with the directives issued by the party and the state, and actively carry out their duties related to the implementation of economic policy, five-year and annual state plans.

As the central bank of the state, the Czechoslovak State Bank draws up and submits to the CSSR Government for approval the CSSR monetary plan, which is one of the integral parts of national economic plans, and in this context its suggestions are used in the planning process for the consolidation of monetary and financial equilibrium. Through its participation in drawing up the economic plans for VHJ [economic production units] and enterprises, the banks presses for their more progressive nature and mobilization of reserves in order to implement the goals of economic policy. By granting credits to the socialist organizations, financing and control of investments, and using tools in the administration of foreign exchange, the Czechoslovak State Bank and the entire bank system actively assist in achieving the goals and fulfillment of tasks of plans of development of the national economy. They control the money supply and by their entire economic activity affect the creation of conditions for withdrawal of excessive amounts of money from circulation. They participate in controlling wage development and carry out payments, treasury and bills of exchange operations.

In accordance with the general emphasis in the management system on increasing efficiency and quality in the entire reproduction process, the State Bank lays greater emphasis on efficient utilization of credits and foreign exchange in the implementation of the state plan, while it promotes on a priority basis the process of more rapid application of new equipment, expansion of progressive productions which achieve optimal results on foreign markets, and effective and economical utilization of basic capital and floating assets.

Special importance has been attached particularly in recent years to the role of the bank in consolidation of monetary equilibrium. The development of currency and its stability are linked to the economic results of enterprises. The planned, proportional development of the social reproduction process is thus of key importance to the planned development of currency.

The bank's monetary policy during the period after 1980, therefore, lays emphasis on the fact that, together with the active promotion and support of goals, intentions and tasks of CPCZ economic policy, conditions must be created for the active use of financial and credit tools in order to promote increased production efficiency and intensification, and simultaneously to consolidate monetary, fiscal and budget balance as stated by the 16th CPCZ Congress in the Main Directions of CSSR Economic Development during the 1981-1985 Period. In pursuing this policy, the Czechoslovak State Bank makes use of experiences and results achieved in the implementation of bank monetary policy and monetary plans in the last period.

Main Tendencies of Economic and Monetary Development during the Sixth Five-Year Plan

The gradual enlargement of the material base of socialists society and the intensification of domestic and international division of labor is making economic management increasingly complex and demanding. The same applies to bank monetary policy, increased effectiveness of bank tools and application of both time-tested and new methods of bank work, particularly in financing, granting of credits and administration of foreign exchange.

Credits advanced to the enterprise sphere amounted to Kcs 421.8 billion by the end of 1980. The amount of these credits represented 86 percent of the national income. The amount of money made available through credits to the economy for financing of the national economic needs is thus considerable and creates the basis for the active role of the bank in affecting the reproduction process.

The bank monetary policy contributed during the Sixth Five-Year Plan to the fact that, despite complex and demanding external and internal economic conditions, our economy further developed; that the basic plan targets were met and the living standard of the population and the economic potential further increased. Social production and social labor productivity also increased. The production increase and the economic growth created the necessary resources for investments as well as for the increase in personal and social consumption. The CSSR's participation in the international division of labor intensified. Foreign-trade turnover increased two-thirds during the Sixth Five-Year Plan.

Monetary development also had some positive features. The state budget was balanced in all years of the Sixth Five-Year Plan and the payment and clearing system in the domestic economy worked smoothly. In contrast to the continuing inflationary development and rapid depreciation of the purchasing power of currencies in all nonsocialist countries, the development of the purchasing power of the Koruna can be regarded as positive.

There were also some problems which were critically pointed out at the 16th CPCZ Congress. The conditions of development worsened to such an extent that, despite unquestionably positive results achieved, the targets set for the Sixth Five-Year Plan were not completely met. Our economy was adversely affected by the general price trend in the world and by the problems in the world supply of energy and raw materials. Among our domestic problems, it was primarily the unsatisfactory implementation of scientific technical achievements in production and inadequate utilization of energy and raw-materials resources and of capital production assets and labor force.

The processing industries insufficiently adjusted their production structure and quality to the national economy's and population's needs. Engineering did not manage to fully adapt to the demanding conditions of the world market and failed to meet its export targets.

Unfavorable climatic conditions during the 1976-1979 period were negatively reflected in the production of grains. The unplanned emergency imports necessitated by our needs put an extra burden on our balance of payments.

These undesirable deviations were reflected also in the monetary area.

The failure to meet the targets set for the increase in efficiency resulted in the smaller production of funds in the enterprise sphere. Profits were 20 points below the monetary estimate. Moreover, inventories increased disproportionately to needs. Inventory turnover slowed down by 3.2 days in industry and construction instead of the anticipated speedup of 6.3 days. Thus credits advanced to the enterprise sphere increased 7.3 points more rapidly than anticipated by the monetary estimate.

The population's rate of savings, an important source of credits, during the Sixth Five-Year Plan was 3.2 percent and 1.2 points below the monetary estimate. The increase in the population's assets was Kcs 20 billion below the monetary estimate.

The fund structure of the monetary estimate and the use of funds contributed to the failure to meet the plan targets in the export of engineering products and necessitated some imports not originally planned. Deterioration of the relation between export and import prices accounted largely for the unfavorable trend in the trade balance. Nevertheless, the balance of trade showed a surplus in 1980.

The aggravated conditions during the Sixth Five-Year Plan made the work of the bank system more demanding in the implementation of principles of bank monetary policy. The greater importance monetary aspects assumed, the more attention had to be paid to the credit and foreign-exchange functions of the State Bank, which was reflected particularly in the improved monetary planning and specification of stricter monetary criteria in regard to effectiveness and repayment of credit in Korunas and foreign exchange. In the drawing up of monetary plans and their implementation in relation to the enterprise sphere, more attention was paid to the problems of the balance of payments, capital investment, money relations to the population, the situation on the domestic market and efficient management of inventories. The method of management by principal goals and other progressive methods began to be employed in the work of the bank.

The application of active methods in the implementation of bank monetary policy during the Sixth Five-Year Plan helped mobilize the reserves in the economy and produced some concrete positive results. Valuable was, for example, its assistance in search and implementation of suggestions for improving the balance of payments, pressure on increased shipments to the domestic market and more effective utilization of reserves in floating assets, on making capital investment more efficient and so on. The achievement of these results was also made possible by more subtile differentiation in granting credits and enforcement of bank rights toward mismanaged organizations.

Bank monetary policy after 1980, whose principles were approved by the CSSR Government in December 1980, maintains continuity with the previous period in the use of bank credit and foreign-exchange tools, preserves and expands what proved effective in the past, but modifies it in accordance with the "Set of Measures for Improving the Planned Management System." It reacts to the specific, complex and demanding conditions expected in the 1981-1985 period in order to actively and effectively affect the economy in accordance with the economic policy formulated by the 16th CPCZ Congress and to fulfill the Seventh Five-Year Plan, budget estimate and monetary estimate for this period.

Bank Monetary Policy in the Seventh Five-Year Plan

The goals and intentions stated in the "Main Directions of CSSR Economic and Social Development during the 1981-1985 Period," which were approved by the 16th CPCZ Congress, will be specified in the Seventh Five-Year Plan of development of the national economy and in the annual operations plans. The fulfillment of these tasks will be considerably demanding because it will take place, as is already the case during this first year of the Seventh Five-Year Plan, under more complex internal and external conditions. Among them, we must mention particularly the limited possibilities and higher costs of acquiring the necessary fuels, energy and a number of important raw and industrial materials both from abroad and from domestic sources, intensification of competition on Western markets, higher demands of foreign and domestic consumers in regard to the quality and technical standard of products, but also the smaller increase in the labor force and more limited possibilities of investment.

In order to accomplish the main goal of economic policy, namely to maintain and raise the living standard even under these demanding conditions, the emphasis is laid on the vigorous promotion of intensive economic development and structural changes aimed at smaller production increase in sectors with a big energy and imported raw-materials consumption and at a bigger increase in production sectors using domestic raw materials, while substantially reducing fuel and energy consumption, and making more efficient use of material inputs.

Undisputable priority is assigned to the area of foreign economic relations. The emphasis is put on achieving a marked excess of exports over imports and increased efficiency of foreign trade.

The monetary estimate for the Seventh Five-Year Plan and the annual monetary plans will help create conditions for the implementation of these tasks, goals and intentions listed in the "Main Directions of CSSR Economic and Social

Development during the 1981-1985 Period." In comparison with the period of the Sixth Five-Year Plan they are characterized by a slowdown in granting new credits (reduction of credit volume). The credit increase will be secured by the mobilization of internal reserves.

The slowdown in granting new credits has been necessitated not only in regard to the pertinent tasks and economic problems, but also because of strengthening the ties between credits and their source. Its purpose is to exert more pressure on the efficiency and quality of the reproduction process and mobilization of reserves in the khzoraschet sphere, on increasing production of funds, particularly of profits in enterprises, and their increased share in financing of enterprise needs, investments and operation.

To secure the planned development of operations credits, the bank has set itself the task of pressing in industry and the building trade for the acceleration of inventory turnover in comparison with the Sixth Five-Year Plan in such a way as to exert pressure on the utilization of considerable reserves in inventories to achieve a production increase which is of extraordinary importance under the conditions of limited supply of fuels, raw and industrial materials. Due to the restriction of investment projects, the increase in investment credits will also slow down. The key criterion for granting investment credits will be the effective support of target programs and plans aimed at the restructuring of the economy, and of societywide priorities which will result in the improvement of the balance of payments.

The population's assets should account for approximately 50 percent of the planned increase in credit funds. This presumes that the rate of the population's savings will be maintained at least at the average level attained during the Sixth Five-Year Plan. In pursuing this goal, the bank will assist in creating conditions to improve the domestic market situation primarily by coordinating the cash earnings of the public with national income formation and ensuing consumer goods supplies in the planned volume, structure and quality.

The monetary estimate for the 1981-1985 period and its concretization in the annual monetary plans will simultaneously set the goals and tasks whose accomplishment and fulfillment will be promoted by the implementation of principles of the bank's external and internal monetary policy during the period after 1980. These principles were approved by CSSR Government Resolution No 400 of 9 December 1980.

The bank monetary policy for the Seventh Five-Year Plan is an integral part of state economic policy, supports the intentions of the state plan and simultaneously also its priorities. Its principal goal is to press for efficiency and economy in the entire national economy, effectively encourage the mobilization of internal economic reserves and utilization of domestic and foreign resources in order to achieve the necessary restructuring of our economy and modernization of production, and particularly to promote the expansion of profitable export productions. This is at the same time also how to consolidate the economic and monetary equilibrium within our economy as well the equilibrium in the balance of payments, and thus also how to consolidate the stability and purchasing power to the Koruna.

To accomplish this fundamental goal, the bank monetary policy will be of an actively restrictive nature during the Seventh Five-Year Plan. This means that, on the one hand, credits and foreign exchange will not be as easily available to the enterprise sphere as in the past. In other words, Korunas will become more precious. This is to be achieved by a more strict and differentiated procedure in granting credits, while observing the basic monetary principle of repayment of credits Korunas and foreign exchange on schedule, and systematically exerting increased pressure on their more effective use with reference to world parameters of efficiency and labor productivity. This tendency will be supported by the slowdown in granting of new credits which should ultimately lead to the mobilization of reserves in the enterprise sphere and to greater economy. On the other hand, the bank monetary policy will markedly support all progressive tendencies toward increased profitability, effective projects connected with the application of scientific-technical progress and increased effectiveness of international commodity exchange. There will be enough Korunas and foreign exchange available to our enterprises for the progressive projects which will open the road to foreign markets.

In accordance with the fundamental goal of bank monetary policy and its actively restrictive nature, the application of scientific-technical achievements will be supported more vigorously in replacement of basic production assets by capital investment in order to compensate for the gradual depletion of the labor force reserve and deteriorating internal and external conditions for acquiring basic raw materials. The emphasis is on the support of efficient forms of capital investment, such as modernization and automation and more rapid application of scientific-technical progress aimed at the restructuring of the Czechoslovak economy and rationalization of production processes. As to the imports of progressive equipment and technology, the emphasis will be on the more rapid repayment in foreign exchange of credits granted in foreign exchange.

The bank monetary policy will more resolutely insist on further gradual reduction of material consumption in the production sector, on more effective utilization of all raw and industrial materials particularly fuels, energy and metals, in order to achieve the greatest possible economy in all sectors of the national economy.

To facilitate the solution of problems concerning the balance of payments and acquisition of foreign exchange necessary for indispensable imports, more assistance will be rendered to the desirable structural changes aimed at the expansion of profitable export and anti-import productions, to broadening the scope of cooperation and specialization agreements and integration projects, and to the more rapid adaptation of production to the requirements of foreign markets.

To cover the population's purchasing power with the corresponding material values in the required quality and structure, bank monetary policy will create conditions for granting credits on and foreign-exchange support of the increase in needed production of consumer goods, including goods obtainable only with difficulty or in short supply, and for providing better services paid for by the population in order to help maintain and raise the existing living standard.

New Features and Tools of Bank Monetary Policy

To attain the goals followed by the bank's internal and external monetary policy, the mechanism is being improved for use of bank monetary tools, such as credits, interest, money-supply control and foreign-exchange monetary tools in order to make them more effective in the national economy and to create conditions for better discharging of the functions and tasks of the bank system, particularly in the areas which are most important from the monetary standpoint, such as balance of payments, intensification of the equipment-replacement process, profitability of investment projects, utilization of inventory reserves and consolidation of the balance on the domestic market.

The improvement of bank tools is part of the new economic mechanism, employed in accordance with the "Set of Measures for Improving the Planned Management System" since the beginning of 1981, and is linked to the measures effected in other areas of economic policy and economic management.

The improvement of monetary planning is also closely related to the measures for improving the planned management system which lay greater emphasis on the long-term nature of planning of target programs and the qualitative aspects of development. The role and mandatory nature of the five-year monetary estimate is underscored. This creates conditions for concretization of goals and tasks in the credit and foreign-exchange area in relation to ministries, VHJ and enterprises with reference to their five-year plans, and spells out in the five-year credit protocols also the conditions for attaining these long-term goals. Qualitative monetary criteria will be applied more effectively at all stages of the planning process in order to enforce the criteria of efficiency. Methods of implementing the monetary plans will be devised in such a way as to increase the interest and responsibility of ministries and enterprises for the development of credits.

Further work on improving monetary planning aims at the tightening of links between individual parts of the monetary plan in such a way as to strengthen the unity between the activities of the bank system in the area of credits, money turnover in cash and instruments of credit and administration of the foreign-exchange supply in order to establish closer ties between the Korunas and foreign-exchange area in the drawing up and implementation of plans, and to make bank tools more efficient.

Conditions will thus be created for exerting a bigger effect by the bank system on the implementation of domestic and foreign bank policy.

Domestic Bank Monetary Policy

The purpose of new measures in the domestic bank monetary policy is to enhance the active role of the bank system and effectiveness of its work in relation to the enterprises and thus to help implement the CPCZ economic policy.

The focus of the bank economic work shifts to the stage of drawing up of economic plans in order to strengthen the preventive impact of the bank on the optimization of these plans in accordance with the criteria of efficiency and economy. The active bank participation in drawing up of plans for VHJ and enterprises, connected with the discussion of credit needs and terms for

and enterprises, connected with the discussion of credit needs and terms for granting credits, will focus on the enforcement of requirements necessary for achieving equilibrium in the balance of payments, on the support of increased production for the domestic market and on the utilization of all production factors. The bank will render active support of the worker initiatives in the application of principles of counterplanning.

To implement the intentions and measures in the new economic mechanism which are designed to increase the responsibility and interest of enterprises in the qualitative aspect of the reproduction process, the differentiated attitude of the bank toward enterprises is becoming more strict. The terms for granting credits are defined in more detail and the requirements of their effective use are made stricter. The criteria of effectiveness in using credits will be specified in accordance with the conditions prevailing in individual VHJ and enterprises. If t agreed upon criteria are not observed in the implementation of plans, the bank will exercise its authority to force the elimination of shortcomings in the management of those organizations to which it granted credits.

On the other hand, the bank will increase its assistance to VHJ and enterprises which on their own initiative try to carry out progressive measures in order to implement the plan and economic policy. The conditions are therefore, modified for granting interest rebates in order to alleviate bottlenecks and lessen the risks involved in planning. The bank tries to create credit and foreign-exchange reserves in the monetary plan and link them to the material reserves in the state plan through utilization of which a broader basis could be acquired for credit and foreign-exchange assistance to highly profitable projects, which are judged as such according to strict economic criteria and guarantee rapid recovery of invested Korunas and foreign-exchange funds.

In view of the increasing complexity of our economic development and persistent shortcomings in capital investment, the bank will employ stricter criteria in granting investment credits and in economic control over capital investment. The bank will more thoroughly examine as early as in the planning stage the effectiveness of individual projects, their indispensability with reference to the existing capital assets, and the prerequisites for their future operation. It will pay special attention to their positive effect on the balance of payments and particularly to the recovery of foreign exchange spent on imports and to the verification of future exports and their effectiveness by parametric criteria. Credits will not be granted on projects with the low profitability rate or other major shortcomings.

In the course of construction, the bank will advance additional credits, if by so doing it will speed up the completion of projects. On the other hand, the procedure will become more strict, if the investment process reveals basic defects such as nonadherence to completion deadlines or exceeding budget costs. In such instances, the drawing on credit will be stopped and additional penalties will apply.

The work with credits following the completion of projects will substantially intensify in order to strengthen enterprise financial incentives for observance and shortening of planned construction deadlines and to emphasize their

responsibility for construction defects at the same time. For this purpose, the possibility will be used of making credit more or less expensive within the specified 4-8 percent interest rate range instead of the former uniform rate of 6 percent.

In support of the goals followed by the establishment of development funds in VHJ and enterprises, the bank will grant credits in this category of investment projects--at a more advantageous interest rate of 4 percent--only to those complying with the specified criteria of profitability and particularly with the rapid recovery of Korunas and foreign-exchange funds invested.

In support of the implementation of the basic line of CPCZ economic policy aimed at the intensification and increased efficiency of the national economy, more operations credits will be used for this purpose. The criteria of effective use of operations credits have been so defined as to actively support the initiative of economic organizations and progressive tendencies, particularly in support of profitable export productions, enlargement of the assortment of consumer goods for better satisfaction of workers' needs and of measures designed to improve supplier-customer relations and the structure and more effective use of working capital and inventories. At the same time, however, the application of these criteria will exert greater economic pressure on the elimination of shortcomings in enterprise management caused by the inadequate use of production factors, waste and insufficient innovation activity.

The most important operations credit is credit on inventories. By credits on inventories the bank makes available the funds necessary for maintaining adequate inventories for the fulfillment of planning tasks while insisting on definite inventory turnover and improvement of inventory structure in order to achieve the optimization of inventories whose development has not been favorable in recent years. The bank will grant credits primarily on the key types of inventories which are of decisive importance for the efficient administration of inventories and particularly on inventories resulting from imports. Special attention will be paid to inventories earmarked for production for exports.

To enforce payment discipline and to consolidate supplier-customer relations, the bank renders credit assistance to organizations which have a temporary shortage of funds. For enterprises with a chronic shortage of funds, special long-term credit assistance will be rendered in the form of so-called consolidation credits which are advanced, in cooperation with the enterprise supervisory organs and other central agencies, in those instances when the enterprise is not able to restore, with its own funds, the balance in management and when it is necessary, with the help of supervisory organs, to enact more radical measures.

In connection with the production-specialization and concentration process, application of scientific-technical achievements and increasing the complexity of economic development, the VHJ will have to exert greater authority and assume greater responsibility. This new position of VHJ in the khozraschet sphere is also taken into account by the bank, and the discussion of basic credit problems thus shifts to the middle level of management and appropriate organizational department in the bank (the so-called sectorial department).

This is not just a formal, administrative centralization of credits which is carried out apart from other areas of management, but an economic centralization which stems from the economic conditions created by the decisions on investments, planning, recording and storing of inventories, billing, management of technical development, personnel and so on. Relations between the bank and VHJ will preserve the economic ties in the areas in which the decisions are made on efficiency and economy, plan fulfillment, costs and worker initiatives in order to eliminate the possibility of covering up deficiencies in some enterprises by excellent results achieved by other enterprises.

External Bank Monetary Policy

The resolutions of the 16th CPCZ Congress on further development of the Czechoslovak economy during the Seventh Five-Year Plan are based on the necessity of achieving the long-term dynamic equilibrium of the balance of payments by using the greater part of the increase in national income for the improvement of the balance of external economic relations. This emphasized priority of external relations means that the financing of all import needs, despite the continuous increase in import prices, will require a big increase in exports, substantially more effective utilization of all imports and particularly of imported raw materials, while restricting the scope of investments.

The foreign-exchange policy of Czechoslovak banks will, therefore, focus in the future on increasing the profitability of exports, reducing the import requirements of production and exports, adaptability of the production sphere to the requirements of foreign markets, enforcing the principle of rapid recovery of foreign exchange in the use of all foreign-exchange funds, and on the systematic promotion of export competitiveness, primarily in the area of new investment projects, by making more effective the monetary tools in the area of foreign exchange--particularly the monetary plan, the Korunas exchange rate and foreign-exchange regulations and incentives.

The foreign-exchange policy will focus on the support of greater international socialist economic integration within CEMA member states as the basic factor in the dynamic development of the economies of the socialist community. The tool for this territorial orientation of foreign-exchange policy will be the coordination of national economic plans with the CEMA member states, long-term agreements and annual protocols on mutual commodity exchange and payments.

The implementation of the "Comprehensive Program of Further Expansion of International Socialist Economic Integration" will result in the permanent and dynamic development of the economies of CEMA member states on the basis of international socialist credits advanced by the International Bank of Economic Cooperation (MBHS) and International Investment Bank (MIB) in Moscow. Within these socialist forms of multilateral economic cooperation, the CSSR grants bilateral credits on a multilateral basis, for example, for construction of major production capacities in CEMA countries, within economic cooperation and assistance to the MoLR [Mongolian People's Republic], VSR [Vietnam Socialist Republic], Cuba and others. On the other hand, the CSSR obtains credits from the MBHS and MIB for projects of an integrational nature either in the CSSR or in other CEMA countries in whose construction the CSSR participate.

The resolutions of the 16th CPCZ Congress emphasized the necessity of rapid transition to the intensive development of the Czechoslovak economy with its full participation in the international division of labor and further increase in efficiency resulting from increases in labor productivity and application of technical achievements. One of the major prerequisites of this orientation of CSSR economic policy during the Seventh Five-Year Plan will be the strengthening of the role the Koruna exchange rate as the objective tool for comparing the results achieved by Czechoslovak production with top world manufacturers and for exerting greater pressure on increasing the efficiency and performance of the Czechoslovak economy.

A characteristic feature of this foreign-exchange policy will, therefore, be the active use of the domestic trade value of Korunas for putting value relations on a realistic basis in the process of drawing up and implementation of plans. In accordance with the dynamics of development of the relation between domestic wholesale prices and prices of our products exported abroad, the bank will systematically and continuously objectify the domestic trade value of Korunas, and thus offer to economic subjects at all levels of management a reliable criterion of efficiency of domestic production and commodity exchange with foreign countries. The more frequent adjustments of the domestic trade value of Korunas will guide both production and foreign trade to more pertinent and prompt reaction to the actual conditions in the world.

The purpose of this active foreign-exchange policy is to show the directions of further increase in efficiency of production and foreign-trade exchange, to stimulate Czechoslovak exporters to achieve greater export profits, to contribute to the elimination of adverse effects of capitalist price inflation on domestic value relationships, and thus to contribute to the stabilization of the domestic price level.

The long-term equilibrium of the CSSR balance of payments in relation to the socialist states is maintained by the annual coordination of national economic plans and their implementation, and in relation to the nonsocialist states by the regulation of payments for the planned imports in accordance with the fulfillment of export plans directly linked to the collection of payments.

During the Seventh Five-Year Plan, the bank will release foreign-exchange funds primarily for imports necessitated by projects requiring minimum foreign-exchange inputs (including payments for imports raw and industrial materials) which will soon and permanently produce the largest additions to our foreign-exchange supply, which in turn could be used for financing of our society's needs. The best way to achieve this goal will most likely be the granting of fully recoverable foreign-exchange credits provided that the net foreign-exchange gain will amount to one Koruna for each Koruna paid for imports. Only in exceptional instances of imports important to the national economy, could this relation be reduced, but not to less than 0.75 Kcs. This means that the net value of imported machinery or equipment (its FOB price in crowns after the subtraction of interest paid to the supplier or foreign bank) must be repaid in less than 1 1/2 years.

Such a rapid recovery can be achieved primarily by modernization projects of an intensification nature--with low construction costs and a short period of putting them into operation--which will make the production process more

efficient, increase the number of shifts worked, reduce the labor force requirements, utilize the domestic production base more effectively, contribute to the innovation of products and their improved salability abroad, and so on.

The implemenation of the above goals of bank monetary policy will require that the workers of the entire bank system actively contribute to the fulfillment of the tasks of CPCZ economic policy which were set for the period of the Seventh Five-Year Plan by the 16th CPCZ Congress. An indispensable prerequisite for that is the increased efficiency of the economic work of the bank, particularly in relation to the enterprise sphere, which will require not only the improvement in the political and professional qualification of its workers, but also their initiative and committed national economic attitude and search of new work methods by the bank for the solution of complex problems. Specific measures in this respect are spelled out in the "Czechoslovak State Bank Program for Implementation of Tasks Laid Down by the 16th CPCZ Congress" which directs the bank workers to increasing their share in the solution of basic tasks under the present demanding conditions.

10501
CSO: 2400/175

DEPUTY MINISTER VIEWS FOREIGN TRADE POLICY

Prague HOSPODARSKE NOVINY in Czech 22 Jan 82 pp 1, 5

[Article by Jaroslav Jakubec, deputy minister of foreign trade: "Effective and Rationalized Import Policy"]

[Text] It is a generally known fact tha the Czechoslovak economy has a typically industrial-processing character and its functioning is to a large measure dependent on imports, especially in fuels, raw materials and a number of other materials and products of the processing industry. More than one-third of CSSR net national foreign trade income derives from the raw national processing fees in the foreign trade area (exports and imports). It is natural, therefore, and this was emphasized at the last session of the CPCZ Central Committee, that our economic policy must devote maximum attention to the area of import management.

This necessity is accentuated, on the one hand, by developments in external conditions, notably the sharp price increase of fuels and raw materials on world markets in the 1970s, as well as the more difficult conditions of their procurement and, on the other, by certain unanticipated developments in internal economic factors which in many ways increased the demand for imports in our economy, despite the increasingly unfavorable external situation. This is attested to by basic data on our imports during the Sixth Five-Year Plan (1976-1980).

While our social product rose 24 percent and the national revenue 17.5 percent during this period, our imports increased 61 percent during the same period, of which imports from socialist countries rose 60 percent and from nonsocialist countries 69 percent (all data in prevailing prices, was about 10 percent, while the annual growth of the physical volume of imports/represented 3.2 percent. The difference between the two indicators expresses primarily the effect of increased import prices. With respect to our trade and payment balance (expressed in foreign-exchange Kcs) in 1981 showed a debit even in relations with the principal trading areas, while the greatest liability was registered in relations with the developed capitalist states (about 2.5 billion foreign-exchange Kcs).

The basic goods structure of our imports during the Sixth Five-Year Plan, was characterized by the following figures:

--the share of fuels, substances and raw materials in overall CSSR imports, rose from 46.6 percent to 48.7 percent, while import growth during 1975-1980 was about 70 percent;

--the share of machinery, equipment, and instruments in overall CSSR imports remained at about 37 percent, while import growth during 1975-1980 represented slightly over 60 percent;

--the share of food products and raw materials fell slightly (from 9.2 to 8.7 percent), the share of foodstuff raw materials, however, rose. Imports of food products and raw materials rose almost 60 percent from 1975 to 1980.

--the share of consumer goods (excluding foodstuffs) fell from about 7 to 6 percent, nevertheless, imports of these goods rose about 40 percent from 1975 to 1980.

The cited figures show the dominant role of fuels, substances, and raw materials (especially fuels, mineral raw materials and metals) in our imports in terms of imports from both the socialist and nonsocialist countries. The share and dynamism in imports of this goods grouping, along with necessary imports of agricultural products, greatly limit the available means in our trade balance for imports of machinery, equipment and other products of the processing industry.

Reflection of Insufficient Intensity and Thrift

There is no doubt that the overall volume and basic type of goods we import are dictated to a great degree by the given material and economic conditions in the CSSR. However, we must not underestimate the effect of those factors and pressures from within the economy and its reproduction process which are a reflection of insufficient intensity and effectiveness of production processes and their management, inadequate emphasis on scientific and technological advances, slow progress in desirable structural changes, etc. on the existing level of and increasing demand for imports in our economy. Imports made necessary by these problems and shortcomings lose, especially with respect to a long-term outlook, their socially rational and effective character, and rather contribute to the problems which they are meant to resolve.

Fuels and raw and other materials constitute the largest and most forceful component of our imports from abroad. According to certain calculations, consumption of energy and raw and other material per unit of net production in the CSSR is as much as 40 percent higher than in other industrially developed countries, which raises disproportionately the demand for imports. It is without doubt that consumption rationalization in fuels, energy, metals and other raw materials, lowering their standard use per unit of production, represents a great reserve of higher effectiveness throughout our economy, as well as less pressure on the balance of payments.

In agricultural production, higher import requirements (besides those caused by inclement weather) are caused especially by insufficient intensity and utilization of plant and animal production reserves, disproportionate losses in production, shortcomings in adding value to foodstuff raw materials in the food-processing industry, inadequate protection and utilization of soil, etc. All this raises the demand for imports of temperate climate agricultural products (fodder, grain, fruit and vegetables, so-called low-tonnage raw materials, etc.).

Shortcomings in capital investment construction, extension of investment cycles and failure to meet deadlines are unfavorably reflected in imports. Among the most flagrant of these is the fact that imported machinery and equipment are left idle and are not immediately put to use in the production process due to failure to adhere to harmonograms and deadlines of capital investment construction. Falling behind planned deadlines in activization of new and reconstructed production capacities often causes a need for more imports of those products which were to be replaced by domestic production.

Some negative influences in imports emanate from insufficient application of scientific and technological progress, from inconsistent implementation of modern structural changes, from shortcomings in and adaptation of the structure of production to the structure of need and from a slow tempo throughout the processes of innovation. This is clearly demonstrated by cases cited in another context.

Also among these are, for example, the consequences of insufficient progress in the application of modern changes and innovative processes, especially in the microstructure of our production, which lead, among other things, to steadily growing imports of finishing products and components needed for securing our deliveries of capital-investment units for export. It is here that the lagging state of our electronics industry and production elements is most pronounced.

From a long-term point of view, it is downright harmful to continue imports of semifinished products and products of those branches which could be developed through an adequate raw material base at home (e.g., lumber, glass and ceramics raw materials, etc.) and for which there are appropriate economic conditions here. In this respect, we must mention especially the inadequate final processing of many types of domestic raw materials, often semifinished products (but also a number of imported raw and other materials), which hinders our national effort to add maximum value and causes additional import requirements.

Innovation in assortment and quality of both engineering and nonengineering consumer goods is not as good as demanded by a growing living standard and the needs of our consumers, and has not yet undergone structural changes corresponding to the demand for high-quality, even luxury, goods. The shortcomings in assortment and quality of our consumer goods on the domestic market are then often resolved through imports of even those goods which have traditionally been produced here. At the same time, certain production capacities manufacture goods in which there is no interest on the domestic market or abroad, and often use for this purpose raw materials and energy which had been imported, not to mention other production factors.

Consequences of Uncontrolled Relations

Many problems and cases of waste in imports also stem from shortcomings in the system of management, especially in the planning process of production and the securing and application of producer-consumer relations throughout the national economy, and between production and foreign trade. Increased pressures for imports appear, for example, as a result of insufficiently balanced intermeshing of sources and needs, production and utility, of low planning and contractual discipline between producers and consumers within the framework of our economy, of difficulties in ensuring cooperative and finishing deliveries for the final producers, etc. These problems affect our economic subjects primarily as consumers (buyers). Many of these seek a way out--rather than the more difficult internal solution--by submitting requests for imports.

The system of management has so far not exerted sufficiently forceful pressures on the growth of effectiveness and thrift and on adding maximum value. To all sources of economic growth, including imports. Economic instruments and value-added criteria (especially relations and level of wholesale prices) have also not provided enough leverage in this direction.

Shortcomings in the balance of availability and needs, and in producer-consumer relations have in some cases led to undesirable counterdirectional exports and imports of identical utility values, with accompanying waste in foreign exchange.

Among the most serious shortcoming, however, is the fact that all that we know of the unfavorable external influences on the reproduction process and on securing the import needs of our economy has not yet been projected with sufficient urgency and seriousness into the economic thinking and action in all areas and at all levels of management. It is taking a disproportionately long time to overcome this 'mental block.'

Certain elements of waste are also brought into our import operations in the area we might call the import infrastructure in the CSSR. This involves, for example, shortcomings in storage management, in transportation, etc., which make the handling of and adding of value to imported goods more difficult, increase cost, limit possibilities of import purchases at more favorable prices (the so-called business-boom purchases), etc. Moreover, in many cases there is even unwarranted demand, in other words, insufficient differentiation of CSSR producer and consumer standards, inadequate effort to eliminate certain undesirable traditional habits and preferences of our consumers, etc.

Binding Element in Economic Policy

The above-mentioned principal problems and shortcomings demonstrate or touch upon the main areas and avenues of approach through which economic policy must strive for higher rationalization, effectiveness and thrift in the securing and optimum utilization of resources in economic growth, including imported assets. In this, especially in imports, there is no doubt that elimination of unnecessary, excessive, thus economically irrational, imports, can open a long-range opportunity for more imports of those products which will more

significantly contribute to the growth of effectiveness in our national economy and to optimum utilization of the advantages stemming from the international division of labor (purchase of modern technology, machinery, equipment, licenses, etc.), as well as enrichment and diversification of our domestic market, etc.

We have already discussed the external conditions under which we ensure our import needs, i.e., the overall trends in global economy and international trade. In this regard, we should recall the fact that the development of new price relations on the world markets also affect (often drastically) the economic criteria for the utilization of domestic raw materials (and the effectiveness of related processing operations) in comparison with outlays for their import and provides an impulse for better value-adding and general utilization of domestic natural resources and existing production factors in the CSSR.

The question of a dynamic concept in the overall economic balance is currently the focus on economic policy of any rationally managed state and national economy. The higher its participation in the international division of labor, the more important is a country's external economic balance. Therefore, securing a balanced payment and trade development with foreign countries, is one of the most important elements of the concepts of Czechoslovakia's economic and foreign-trade policy.

If, in connection with the balance of payments and trade, we speak of import needs in our national economy, we should remember that it is not merely a question of importing material values, but also of the means for the purchase of transport and many other services related to the realization of export and import operations in our foreign trade, the cost of licenses, credit, etc.

To cover objectively and economically justified import needs in our economy, early enough in the process, we must create the necessary foreign currency funds through exports of our goods and services. These must not be exports "at any price" but rather economically effective exports through which we will best maximize the value added by our national effort. Raising the export potential, increasing the competitiveness of our products on the world markets, and higher exports than imports, must become the strategic cornerstones of our economic policy in the area of external relations. In this respect, we start from the fact that internal and, especially, external conditions and their development categorically demand that we restore and maintain within a relatively short time an even payments and trade balance overall, especially in trade with the nonsocialist countries.

We are led to this requirement by many factors. Getting credit in the nonsocialist countries is becoming increasingly more difficult. The conditions and cost (especially interest rates) of its procurement are so prohibitive that its use in our economy is highly ineffective. We cannot allow the overall level of our indebtedness to exceed a reasonable level which reflects the economic potential of our country. We cannot permit the emergence of an untenable burden on our balance of payments and export potential in the form of credit obligations (principal and interest payments).

Such a situation would entail serious economic risks, narrow significantly the scope of our economic policy and could even bring about the danger of political misuse of the indebtedness against the interests of Czechoslovakia and the entire socialist system. It is certainly not necessary to look too far for examples of such phenomena.

The task of ensuring dynamism in the payments and trade balance is dealt with in our foreign-trade policy in the context of our fundamental goals and tasks of economic strategy set forth by the 16th CPCZ Congress, namely, a more effective integration of our economy in the international division of labor and its full application in raising the intensity and effectiveness of the whole reproduction process in CSSR economy. An activist approach to meeting the cited goals lies especially in improving the export performance of our economy as the basic prerequisite for securing our import needs.

This area of securing import needs is a part of and subordinate to the strategic goal of intensification and effectiveness growth throughout the reproduction process of the national economy, such as maximum value added to all resources, lowering standard consumption of energy, raw and other materials, better utilization of domestic raw materials, higher effectiveness in capital investment construction, faster application of scientific and technological progress and innovation, carrying through structural changes in production and consumption, intensification of agricultural production, etc.

We rightly believe that our economic and foreign-trade policy even in this area is quite compatible with the criteria of economic rationality and effectiveness on both the national and international scale and that in its orientation it does not differ from economic and trade policies of other countries involved primarily in industrial processing.

No one--neither at home nor abroad--should expect that we will benevolently tolerate, or even support, the continuation of manifestations of poor effectiveness and waste in the reproduction process of our economy at the cost of disproportionate growth of imports or even higher external indebtedness.

We Are Not Striving for Autarky

For the purpose of summing up the goals and measures of our economic policy, we often use the simplified and consequently quite inaccurate term "anti-import policy." It naturally follows from the preceding analysis that the term "anti-import policy" cannot be interpreted as a trend toward autarky or reduction in CSSR participation in the international division of labor, nor can it be reduced to "a struggle against all imports." In the context of the economic and natural conditions in Czechoslovakia and given the future goals of its economic development, such an interpretation is devoid of all logic and economic justification.

We will continue to import those types of goods and products for the manufacture of which we have no natural or economic conditions here at home and we will be purchasing transport and other services abroad, etc. The volume and structure of imports, however, will be subject to strict criteria of economic rationality, effectiveness, thrift and maximum value added to all production factors and resources applicable to our entire economy. We apply an activist approach to

creation of funds for imports, i.e., higher export potential and better competitive qualities of our products. Both these avenues are necessary for the restoration and maintenance of external balance.

The choice of imported resources will be made in a manner which satisfies economic needs in the procurement of the needed technological and economic level of imported utility values, under the most favorable price and other commercial conditions, and with consideration of the requirement to reduce currency outlays.

It will be necessary to further improve internal systemic and substantial conditions for higher effectiveness in commercial and technical operations in imports, for better utilization of favorable prices in business-boom purchases, for making purchases directly in the producing countries, thus eliminating unnecessary intermediaries, as well as other measures which would contribute to lower foreign-currency payments for imports.

It is obviously also desirable to develop nontraditional enterpreneurial forms allowing import of modern technology to enhance our export potential on the basis of self-financing.

Like our exporters who are encountering increasingly more complicated conditions and sharpening competition on the foreign markets, current and potential suppliers of our market must expect a higher demand by our importers for overall competitiveness of their products, commercial and price conditions, technical services, etc.

The goal of our economic policy calling for the restoration and maintenance of external economic balance (in its individual components, such as trade and payment balances, etc.), is economically justified and has an activist and dynamic character which does not at all limit the opportunities for further growth, integration of our economy in the international division of labor, nor does it hamper development in foreign trade or other forms of economic cooperation. In order to make full use of these opportunities, an adequate approach by our economic and commercial partners will naturally be required, too.

To ensure conditions for balanced and dynamic trade development with the socialist countries in the future, above all, within CEMA, we will, along with our partners, utilize much more actively and with more incentive opportunities of developing economic, scientific and technological and other forms of cooperation within the process of socialist economic integration, and continue to improve the effectiveness of its mechanisms.

It is significant in this respect that the CEMA member states place in the foreground the requirement of consistent passage to an intensive type of economic development, which fully corresponds to our own strategy.

Trade is a Two-Way Street

With respect to our relations with the nonsocialist countries, it is a known fact that our balance of payments in convertible currencies has to some extent been evened up by our accepting credit from abroad. Stated differently, this means that our export performance in this area was unable to fully compensate for our import needs, including necessary foreign-currency means to cover services, etc. For this reason, the fundamental condition of future development of economic and trade relations with the nonsocialist countries is accelerated dynamism in our exports by means of internal measures to enhance the competitiveness of our products on world markets.

On the other hand, we should note that our exports to this area, especially to the developed capitalist states, are encountering some problems emanating from the unfavorable economic and business situations in these countries. We are disturbed by some of the protectionist and restrictive measures in these states, aimed at limiting imports, frequently in a discriminatory manner, which affects our traditionally exporting branches (many types of consumer goods, metallurgical products, etc.). It would be in the interest of mutally beneficial future development of trade relations to reduce, or at least not expand further, these political and commercial obstacles. By the same token, in other forms of economic cooperation, such as technical and production (industrial) cooperation, it would also be desirable to create mutual conditions for their development on the basis of mutual benefit and thoughtful balance.

In the export policy of the developed capitalist states toward the CSSR and the other socialist countries, there increasingly appear elements of a discriminatory and restrictive character whose continued motivation in a number of cases clearly stems from subordinating economic relations to political objectives. This includes especially the misuse of the embargo, sharpening of so-called export-control in the area of high-technology products, measures governing the extent and conditions for granting export and other types of credit, etc. These manifestations signal to us the need for caution by us in planning future development of economic relations with certain capitalist countries, even with respect to possible future orientation of our import sources.

In relations with the developing countries, it will be necessary in future development of our imports, to make sure that both sides, the CSSR and the respective developing countries, create conditions especially for direct export from these countries to the CSSR without unnecessary intermediaries, and for more activism and competitiveness of the exports of these developing countries on our market.

By means of gradual structural changes in production and consumption, and through development of higher forms of economic cooperation between the CSSR and interested developing countries (especially technical and production cooperation), it will be possible to create conditions for further growth of exports of semifinished and industrial products from the developing countries to the CSSR.

It has often been said with authority that development of foreign trade is a two-way street. The course on our side of that street is characterized by continuing activist efforts toward a mutually benefical, equitable and balanced growth of economic and trade relations with all interested countries. We expect a similar course from our partners abroad.

9496
CSO: 2400/143

BRIEFS

MERCHANT FLEET REDUCTION--The GDR is reducing its merchant fleet. As announced, "several large ships" are to be "decommissioned" this year. The primary reasons are apparently economic; among other things, fuel is to be saved. With a clearly reduced transport capacity, the merchant fleet is to transport about 10.5 million tons of cargo according to the 1982 plan (12.5 million tons in 1980). The target for this year is to be attained especially by increasing the "tonnage productivity." In 1980 the GDR merchant fleet listed 192 ships totaling 1.3 million gross register tons. [Text] [Bonn IWE-TAGESDIENST in German No 9, 20 Jan 82 p 1]

CSO: 2300/175

HUNGARY REDISCOVERS MORTGAGE BONDS

Budapest FIGYELO in Hungarian 10 Feb 82 p 5

[Article by Endre Ferenczi: "Mortgage Bonds Rediscovered"]

[Text] There is an increase in the number of ads seeking financial backers for business ventures. There obviously are, and will be, persons with liquid assets who would like to derive more income from such assets than what interest the OTP [National Savings Bank] pays on deposits. However, the bringing of such assets into a partnership is legally limited, and the transfer of such assets is not entirely without risk. The objective is to create a flow of personal capital that truly enhances the interests of the national economy. Today this is already necessary and even feasible.

At present there is practically no framework within which the Hungarian banking system can supply credit for the business partnerships of private individuals (outside agriculture). Therefore it will be worthwhile to consider reviving a forgotten branch of bank business: the writing of mortgages and the issuance of mortgage bonds. (One should not be confused by the fact that today OTP provides mortgages for housing construction, but it does not issue and market certificates covering a partial interest in the mortgages.)

It will suffice to start out from the fact that eager and imaginative entrepreneurs often do not have sufficient cash. However, they might have a summer cottage or building lot that they do not wish to sell to finance the venture, but would gladly put it up as security for credit. The private individual who in principle would be willing to make his liquid assets available for the venture will find it very difficult and complicated to have his claim secured with such real estate. The practice of securing loans with real estate worked well for a long time, but in our country it has fallen mostly into disuse. It could be employed again, although on a limited scale.

Questions of Interest

"Since in Hungary the issuance of mortgage bonds has ceased in practice more than four decades ago, even experts have forgotten most of concepts, regulations, methods and business practices related to the issuance of mortgage bonds, and to the loans on the basis of which the mortgage bonds are issued," wrote Dr Laszlo Jozsef Nagy in 1972, in his work entitled "A Zaloglevel-Kibocsatas Alapjaul Szolgalo Torleszteses Kolcson Konstrukciojanak a Kialakulasa" (Development of the Scheme of the Amortization Loan That Serves as the Basis for Issuing Mortgage Bonds) that was commissioned by the Economic Department of the Hungarian National Bank. Not much has

happened in the ten years since the publication of this work, and the proces of falling into oblivion continues. Thus it will be worthwhile to refresh our knowledge of these concepts.

"A mortgage loan is a loan secured by real estate. The real-estate property is the security. Personal property usually is pawned: the debtor transfers possession to the creditor. But real-estate property is pledged as security only symbolically, by entering the mortgage in the creditor's favor, on page C of the real estate's cadastral file."

"The mortgage bond, usually a bearer bond that earns interest at a fixed rate, is issued pursuant to special statutory provisions, by a financial institution that engages in mortgage lending, up to the amount of its outstanding loans that have been approved in accordance with the institution's by-laws and are fully secured by mortgage."

"Over the course of the loan the debtor repays it in equal-amount annual installments that include both principal and interest. Fixed capital's payoff period is long, and therefore also the loan must be a long-term one." (All quotes from the cited work.)

The first question we must examine is what type of real estate can be mortgaged, with special attention to the peculiarities in Hungary. On the basis of the statutory regulations restricting the acquisition of real-estate property, the types of real estate that can be used to secure a mortgage loan are vacation homes, weekend cottages, empty lots, and possibly nonowner-occupied, temporarily let condominiums and family homes. A condominium or family home peramanently occupied by the owner or someone else is unsuitable for this purpose, because the auctioning of such real estate in the case of default would raise numerous and well-known problems in conjunction with finding other premises for the owner or tenant.

The rate of interest on mortgage bonds must be sufficient to offer, after income tax, a higher return that the 7-percent interest currently paid on a 3-year savings certificate. The mortgage bond's term can be 10 to 15 years. This would approximately be in accord with the longest terms of the investment credits offered by MNB [Hungarian National Bank].

On the basis of the term and the interest rate, the annual installment should be around 18 to 20 percent. At first glance this seems high. But one should consider that one of the conditions for obtaining investment credit, according to the credit-policy directive for 1981, was a profit of at least 14 percent on invested capital; and for 1982 it is even more, due to the higher interest rates and the changes in the economic regulators. Moreover, a profit much higher than 20 percent can reasonably be expected of small, agile ventures that are labor-intensive rather than capital intensive.

Negotiability

Mortgage bonds must be nogotiable. Since there is no stock exchange under our social and economic system, negotiability can be solved only by having the issuing bank repurchase the mortgage bond--at the owner's request, and perhaps below the nominal value--and then resell it. The question is what volume and value of mortgage bonds can be expected to be issued and resold if this idea is adopted.

There are two limits on the volume and value of the mortgage bonds. One limit is the lending capacity and interest of individuals with suitable liquid assets. And the other limit is the number of entrepreneurs that have real-estate property suitable for mortgaging and are seeking such loans, in the expectation that the profit from the venture financed with the capital borrowed in this manner will exceed the cost of servicing the loan. It is of course impossible to offer numerical estimates in the stage when an idea is first raised. If suitable interest rates are set, however, I assume that the volume and value of mortgage bonds will be limited by the demand for credit rather than by its supply.

Acceptance of the proposed scheme raises questions of taxation and legislation as well. At first glance it seems that interest payments on the loans should be charged to the costs of the venture, while the interest earned by owners of mortgage bonds--unlike the interest paid on OTP deposits--would be subject to income tax. If the financial authorities concerned were to depart from this concept and decide that such interest income is not taxable, then the interest rate could be lower, to stimulate ventures. The securing of mortgage bonds is governed by two laws, one enacted in 1876 and the other in 1928. It is safe to assume that these statutory regulations will have to be brought up to date and amended.

It would be warranted to ask whether the unearned income of the owners of mortgage bonds would mean the return of capitalist society's "coupon clippers," although fewer in number and on a smaller scale. It will be worthwhile to quote again from the cited publication of the Hungarian National Bank: "In any social system that recognizes private or personal ownership of real-estate property it is possible to issue mortgage bonds and make mortgage loans. Thus the mortgage bonds, and the loans on the basis of which the bonds or certificates are issued, are by no means capitalist categories. They existed already in the last decades of feudalism, and there is nothing to prevent the issuance of mortgage bonds in the period of building socialism, as this has been demonstrated also by the example of GDR.

To these arguments we might add that the interest is income derived from savings, in the same way as the interest on savings deposits. Furthermore, the value of privately owned real estate, often inadequately utilized, could be employed in this manner to help finance ventures that are in accord with the objectives of the economy.

1014
CSO: 2500/134

SEVERAL ENTERPRISE BUSINESS WORK PARTNERSHIPS LAUNCHED

Budapest MAGYAR HIRLAP in Hungarian 18 Feb 82 pp 1, 4

[Text] Taking advantage of the existing opportunities, many enterprises have already formed or are forming intramural ventures for which the enterprises themselves provide equipment and work. MTI reporters acquaint us with such initiatives.

The Transelektro Foreign-Trade Enterprise (Transelektro Kuzlkereskedelmi Vallalat) hired multilingual architects, engineers and technicians. They form a separate work partnership that monitors foreign invitations to tender, quickly prepares the plans and budget for the proposed investment and submits the tender. The greater flexibility and speed can benefit the entire business of the foreign-trade enterprise. Earlier Transelektro was able to subimt its tender only late and in many instances did not get the contract, because the planning-and-design enterprises and industrial enterprises often had conflicting interests and were late in preparing their own proposals.

Among the possible forms of entrepreneurship, the Orion Factory is considering the founding of subsidiaries, jointly with other industrial enterprises in the telecommunications industry. With the Telephone Factory (Telefongyar), for example, it is considering a joint subsidiary that would undertake turnkey construction of various transmission systems and microwave links. Another joint subsidiary to be formed soon--again with the Telephone Factory, and also with the Telecommunications Enterprise (Hiradotechnikai Vallalat), Precision Engineering Enterprise (Finommechanikai Vallalat), Budavox and Emexport--will organize and undertake construction of complete telecommunications systems. A market survey showed that, for example, several Middle East countries would be willing to order telecommunication links on a turnkey basis, which includes construction, installation, training and servicing. Earlier the enterprises were able to work on such projects only with difficulty, because manufacturing the equipment, planning and design, construction, servicing, and the supply of spare parts--all had to be planned and organized separately, and the interests of the various enterprises were not always identical.

At the Hungarian Shipyard and Crane Factory (Magyar Hajo- es Darugyar), after encouragement from management, many blue-collar workers are interested in forming enterprise business work partnerships that can help plan fulfillment. There have already been some specific initiatives. For example, several workers of the structural steel shop are planning to form a work partnership that would make structural components after their regular shift, using the enterprise's equipment. There is great need for such structural elements at MHD [Hungarian Shipyard and Crane Factory]

because their production has been plagued by bottlenecks for years. Another collective, consisting of designers and editors, has undertaken to translate and adapt the technical documentation. Previously such technological specifications and technical analyses were farmed out to outside organizations, but translation was too slow and involved too much red tape.

Several work partnerships will soon be formed at the Komarom Megye State Construction Industry Enterprise (Komarom megyei Allami Epitoipari Vallalat), by painters, tilers, masons and ot her craftsmen. The enterprise will place the plans, machinery and materials at their disposal and will provide technical guidance and even legal advice. These work partnerships will undertake construction projects that the enterprise itself was unable to accept in 1982, because of capacity shortage. The work partnerships will be working on the construction of a new hospital wing and the cultural center in Tatabanya, and on the expansion of the school in Sarbereg. The enterprise is offering such work primarily to its own employees, but it does not exclude even outside small organizations and private aritsans.

1014
CSO: 2500/136

CHIEF CROP PRODUCTION SYSTEMS PLANS FOR 1982

Budapest MAGYAR MEZOGAZDASAG in Hungarian No 2, 82, pp 4-5

[Articles by Dr Janos Toth, managing director of the Babolna Industrial Corn Production System; Laszlo Juhasz, deputy director, and Lajos Zubek, central agronomist, of the Baja Corn Production System; and Laszlo Avar of the Corn and Industrial Crop Production Cooperation System: "Crop Production Systems: How To Proceed"]

[Text] IKR [Babolna Industrial Corn Production System]: We Are Continuously Developing Technology

The management committee accepted our plan on 30 September 1981 for the development of corn production. Following a review of our experiences, we now regard it as our most important task to hold consultations with the experts of our member farms.

Our material possibilities and our investments are presently declining. In addition to the enterprise sums of money available for production development, our system intends to use the means of the member farms in the service of production development by employing available and releasable means. We must use our reduced amount of money more intelligently and purposefully, and we are directing our machine purchases and other investments accordingly.

We want to improve the present temporary situation with a better acquisition of spare parts supplies by using surplus capacities for the manufacture of spare parts, and by putting the spare parts we lack into production. We shall survey the spare parts supply of the member farms in order to have an exact inventory of shelved and slow-moving spare parts that we may bring the inventories in motion and thereby reduce the means that are now tied up and moderate the shortage of certain spares.

To have mutual agreement by the enterprise and member farms on the Seventh Five-Year Plan, we have taken into account next year's development goals of our member farms. Among other things, it may be stated that in comparison to the 7-ton average corn production planned at the IKR level our member farms have planned 7.3 tons. Both in wheat and corn production we are striving to increase and improve our use of the genetic potential, increase the oil and protein content, and preserve to the maximum extent the biological values.

In the field of restoring nutritive material, we are urging deep fertilization, and to this end we are conducting in increasingly greater areas comprehensive clay mineral studies in cooperation with the Plant Protection and Agrochemical Center of MEM [Ministry of Agriculture and Food Industry].

We shall use the full capacity of our liquid fertilizer plant. As a result of technical alterations, we have raised the capacity from the planned 15 tons per hour to 20 tons. Planned annual production is 31,000 tons, which is enough for the liquid fertilization of about 45,000 hectares. For the operational implementation of liquid fertilization we have established the AGROBER-NEVIKI-IKR Association in the framework of which we shall increase the domestic production of suspensoid fertilizers. We have included in this year's plan the construction on our member farms of 5 to 6 liquid fertilizer plants, where the work is already in operation. Our member farms regard the use of suspensoid fertilizers as one of the real possibilities for production development, and in their development plans up to 1985 they require liquid fertilizers adequate for 250 hectares.

The BHF [Babolna Meat Processing Plant] will begin operating this year and its technology has been realized on the basis of a Babolna Agricultural Combine license for the manufacture of means useful in the field of crop production and foddering. On the basis of a cooperation contract we signed with VASKUT [Iron Industry Research Institute] we want to exploit the advantages of micro-element fertilization and to satisfy primarily the demands of the IKR member farms at lower prices than last year.

In order to establish a better base for technological development, we are providing our member farms the technical means for energy saving procedures, such as the medium-deep scufflers (lazitok), heavy cultivators and digger harrows (asoboronak). Our longer term plan for automation is to put out our spraying machinery only with automatic liquid regulators, to use spraying diagnostic equipment, and to use drum loading regulators (dobterheles-szabalyozot).

For modernization of the BI-15 drying equipment we will provide our member farms thermal insulation in the form of a unit package, and we will urge the manufacture of the new dampness regulator automatic which has been tested at IKR. We shall organize use of the heat-regenerator drying technology realized at the Nagyszenas 6 October Producer Cooperative.

We shall increase the use of wet corn storage, primarily by making general use of the technology for a grain-cob mixture preparation. For working out the credit conditions for energy rationalization competitions, we have a model which we will make available to all our member farms. In the coming weeks we shall hold at our production-organization units demonstrations on how to prepare grain-cob mixtures, and to which we shall also invite the farms from the territorially appropriate megyes. We shall undertake the technical means for preparing the grain-cob mixture, the BF pulverizing machines, and we shall also manufacture the Class modifying units and meet the entire domestic demand.

To transmit and cirulcate production experiences, we have formed at the IKR a club of 8-ton corn producers, the functions of which we hope will promote the further growth of production.

BKR [Baja Corn Production System]: Wider Cooperation

In December 1981 we had 164 partner farms with 238,829 hectares of contracted area on which the main crops were divided as follows: corn 81,122, wheat 99,892, sunflower 18,388, lucerne 12,101, grass 10,501, and silage corn 9,638 hectares.

We plan to make progress in the following major areas in 1982.

We have signed an agreement with the GDR Fortshcritt Agricultural Combine for the manufacturers' service of the E-516 combines and for the so-called "E" machines which they distribute. For the manufacture of additional spare parts we are sending in 1982 about 100 trained and unskilled workers to the GDR. Because of the extremely bad spare parts supply, we have initiated the import from socialist trade (GDR) of ZT-300 and ZT-303 tractors to replace the Zetor Crystal tractor, and the licensing for this is already in process. In cooperation with the reorganized MEGEV [Agricultural Machinery Spare Parts Supply Enterprise] and AGROTROSZT [Agricultural Supply Trust] we are organizing the manufacture of spare parts that are on the shortage list, based partly on the technical manufacturing capacity of our Combine and the system, and partly on the industrial activity of our partner plants. Together with MEGEV we are organizing the dismantling of used machines, the distribution of usable spare parts, and the renovation of spare parts.

For further development we are increasing the area first used in 1981 for intensive corn production and the Baja large-yield wheat program. The primary goal of these two programs is to harvest the largest possible production volume per unit of area in such a way that the profits of the sub-branches will also increase. In both programs we would like to achieve our goals by maximum exploitation of the biological producer capabilities latent in the types, or in hybrids. However, our intensive grain production technology requires stricter technological discipline and in execution "tablaszintu" expert advice from our system. All this will be realized through the high-level unity of science and the production experiences of the system, the results of which in 1981 were as follows: revenue on one hectare through the use of traditional technology 6,137 forints and through the use of intensive technology 12,373 forints, which means a surplus revenue of 6,236 forints per hectare besides an average production of 10.94 tons.

The Baja Agricultural Combine, the Szeged, Ujvidek and Zagrab agricultural research institutes, the BKR partner farms, and the BKR participate in the Baja large-yield wheat program. The research institutes recommended a certain type and gave a type-specific technology to go with it.

We also want to improve the sowing seed supply of our partner farms by developing the sowing seed units of our Combine, by growing good quality corn, wheat and sunflower sowing seed and working these up according to the requirements of the partner farms.

To improve our grass utilization program we shall cooperate more closely with the Kiskunhalas State Farm. The BKR is recommending to all its partner farms the grass growing and beef cattle breeding program worked out by the BKR Grass and Beef Enhancement Sub-Center which is located there, and is expanded by its sheep breeding and keeping program. With this we can significantly increase the yields of about 40,000 hectares of grass-growing area. It also means that the capability of the areas for supporting livestock will be significantly increased.

Many of our partner farms have sandy areas that are weak in productivity. For the utilization of these areas we are starting an experimental tabacco growing program in 1982.

One condition for the dynamic operation of our production system is the flow of reliable and mutual information. In order to develop this, we are modernizing our organizational structure starting on 1 January 1982. We wish to solve the problem of a higher level service to our partner farms by establishing a new district (Kaposvar) and through rational reorganization of the tasks of the central staff. Our new investments, our expanded educational activity, and our new cooperation program with the supply enterprises, our foreign partners, and other production systems and institutes will also serve this goal.

KITE [Corn and Industrial Crop Production Cooperation System]: The Results of the Largest System

The Nadudvar Corn and Industrial Crop Production Cooperation System held an extraordinary management session 28 December under the chairmanship of Istvan Szabo.

Dr Gabor Magyar, the director, gave an account of 1981 activities and results.

The largest crop production system, largest in area as well, became recently one of the shaping forces of domestic agricultural production. It operated, according to the Nadudvar system, on 15,500 hectares in 1973 and on 629,000 hectares in 1981. On the largest areas they sowed and harvested wheat (257,520 hectares), corn (217,953 hectares), sugar beet (42,257 hectares), sunflower (77,412 hectares), rice (12,974 hectares), and potatoes (4,590 hectares). Moreover, they produced hybrid corn seed, beet seed, rape, soya, and pumpkin seed.

It is worth noting that the total arable area of the KITE partner farms is 1,339,000 hectares, and 47 percent of this is for crops that are in the system. These data show that KITE is the largest arable crop-production system in the country.

Expanding Foreign Ties

Since the establishment of the production system, it has been continously striving to create the possibilities of a developed agriculture. The present activity of the system center extends to the working out and

developing of technologies and to improve the biological bases. It devotes a great deal of attention to the provision of sowing seeds, the acquisition of producer means, and the technical servicing of machines. It undertakes the marketing of certain products. It regards education as a particularly important task, continuation training all the way from the production managers to the tractor drivers.

KITE has established and maintains ties with domestic and foreign plant improvement and seed production firms: in wheat with a Zagrab and Novi-Sad firm, in barley with an Australian firm, in corn with the Pioneer, Funk and PAV firms. For diffusing scientific results they established the Grain Seed Association, which will take over and start counselling on hybrid culture on 1 January. For the mechanization of the production of corn seed, it has tried out various kinds of machinery to establish that there are good sowing and harvesting machines.

There is much to be done in the dissemination of cereal seeds; interests do not as yet coincide. We regard as rightful the requirement of the production system that at the highest second grade wheat seed should be recommended, for a weakness in the biological bases or lack thereof (third grade wheat) can hinder the fulfillment of the grain program.

Therefore, in the development of production technologies great emphasis was placed last year in KITE on the modernization of soil cultivation, the application of time and cost-saving means, and procedures and means that preserve the moisture of the soil.

They worked out the Industrial Grain Production Program to help in the fulfillment of the grain program, and this has been started at 34 farms on 63,000 hectares. They have also worked out the KITE long-term grain production development program, separately for the best, the medium, and the poor units. They have also made recommendations for increasing the grain-producing area, for which possibilities are afforded by the complex development of rough fodder and grass management.

The level of KITE sugar beet production has improved a great deal. The propagation of import types is now at a point where it is possible to increase the ratio of these types.

The farms have learned high-level sugar beet production, but they have still not mastered it--findings state. This is shown by experiences gained in visits to Australia. It is possible and necessary to develop more. Hard, disciplined and consistent work is necessary for the realization of actual industrial-type sugar beet production.

To do this, we have good sowing machines. Hungarian industry has done a great deal in developing harvesters, but still not enough. KITE supports the efforts of domestic manufacturers, but it demands security of operation and good factory services.

Dynamism also characterizes the organization and development of sunflower production in the Nadudvar system. They work in close cooperation with the oleaginous industry as manifested in the selection and provision of type and hybrid seeds. The activity of the production system extends to marketing, storage, and the organization of deliveries. They have eliminated the purchasing enterprises, and thus the whole profit margin belongs to the farms. This means a significant sum of 80 million forints. The oleaginous industry together with the farms and the system center have established storage places. At present they have six, each with a capacity of 5,000 tons.

They have been occupied with the organization and development of rice production for only 5 years. While up to then it had been rather neglected, rice became a crop that could be successfully raised by 1981. All this verifies the correctness of the position that is worth dealing with rice only on modern fields and with a good technical base. Today it has become clear that the experiences of the earlier years (Japanese, Italian, Soviet technologies) verify the correctness of the decisions by the experts. They adapted technologies--water cultivation, sowing and water cultivation, planting--which make sowing possible at the end of April or the beginning of May regardless of the weather.

The production system has also made progress in potato growing.

Last year they started organizing the rough fodder and grass sub-branch. In addition to the technology, they are also organizing the marketing of the dry materials with AGKER and TSZKER. Mention should be made of the production and processing of grass seed by the system, which serves to meet in part the needs of export and in part the needs of the grass management program.

More Machinery--From Eigen Resources

In 1981 KITE purchased more machinery than in previous years. The reason for the upswing was the start of the IGP. Last year they purchased a total of 762 million forints' worth of machinery, mostly from eigen resources and to a lesser extent from credits. It is unconditionally a good initiative, for example, that KITE placed 38 million forints' worth of machinery in 1981 on farms that do not have an adequate development fund. Together with earlier placements, the value of the machines now is at 99 million forints.

It is worthwhile to review last year's machine purchases by the production system, for this gives a picture of the work and the development concepts. They purchased altogether 10 John Deere, IH and Raba Steiger 250 tractors. The member farms of the production system purchased 25 Cyclo corn sowers, and 28 IH 6200 grain sowers. The purchase of harvesters has gone well: 80 Class Dominator 106 combines, 27 Bizon-Gigant combines, 35 Hesston Herriau sugar beet harvesters, 11 Hesston self-propelled chaffers, and 57 Hesston trailer chaffers. There are 35 John Deere stalk crushers in operation and 134 Hesston round balers [korbalazo].

The service network is gaining an increasingly greater role in technical service.

Service is not worth much without spare parts, and therefore from the beginning they tried to have the spares for the machines they repaired. And they have been successful, for in 1981 they had a trade of 600 million forints.

Three Hundred Seventy Six Farms

The member farms of the Nadudvar system can be proud of their 1981 results. Despite the unfavorable start because of the early spring drought, we can list record results for every crop except wheat.

One hundred and thirty four farms produced 4.41 tons, 106 farms 4 to 5.5 tons, and 29 farms over 5.5 tons.

On 218,000 hectares the average for corn was 6.94 tons. Two hundred eighty three farms raised corn according to KITE technology: 57 under 5 tons, 66 between 5 and 6 tons, 99 between 6 and 8 tons, 50 between 8 and 10 tons. Eleven KITE farms attained an average over 10 tons.

They harvested an average of 42.3 tons of sugar beets on 42,500 hectares. Twenty four farms produced under 30 tons, 96 farms between 30 and 50 tons, and and 21 farms above 50 tons.

They harvested an average of 1.99 tons of sunflower on 77,000 hectares.

They had an average of 3.01 tons of rice on 13,000 hectares.

They had a production average of 27.5 tons of potatoes on 4,500 hectares.

Thirty four KITE farms participating in IGP produced corn on 48,500 hectares. Here surplus production came to 1.7 tons.

This year's plans include applications from 12 farms for entry into KITE and requests from 6 farms for withdrawal. As a result of associations, 376 farms plan to be members of the Nadudvar KITE in 1982.

The KITE area will grow to a much greater extent than this. This year's service contracts have been signed: their area has increased by 103,000 hectares. Accordingly, the farms will be managing under intensive circumstances on 732,000 hectares, of which 31,000 hectares of grassland is a part. This is a huge expanse which also brings a tremendous responsibility. Last year's KITE results verify that the managers and experts of the Nadudvar production system are equal to this responsibility and confidence.

After these things, the extraordinary management session arrived at decisions in personnel matters. Because of other important assignments, it released Dr Gabor Magyar from certain administrative tasks. At the same time it entrusted these tasks to Csaba Balogh, who up to now has been the technical deputy manager of the production system.

6691
CSO: 2500/138

STATE FARM ACCOUNTING SYSTEM VIEWED

Budapest FIGYELO in Hungarian 10 Feb 82 p 13

[Article: "The Background of Incentive"]

[Text] The introduction of various incentive and management systems is not merely a matter of arriving at a decision. For example, it was only in 1979 that the Komarom State Farm reached, as a result of purposeful production development and organization, the level where it could introduce an internal self-accounting system.

Let there be no misunderstanding! This method is fairly well known, and therefore it is not likely to have the impact of an innovation, but the planning, organizing and incentive systems which are latent in it are not only different from one another but are often still undeveloped.

Stepped Up Plans

It is difficult to coordinate sub-branch and overall enterprise interests. To put it more exactly, there are always hidden channels through which the profits formed in the sub-branches or the production units escape at the cost of profits to the overall enterprise.

At the Komarom farm the basis of accounting and evaluation of the self-accounting units is to be found in their considerably stepped up plan. Analytical and preparatory work precedes the preparation of the annual operation plan during which they measure the expected effect of the economic regulators on the farm as a whole, including the profitability of the individual main sub-branches and the self-accounting units.

On this basis the managers of the main sub-branches--taking into account the five-year plan of the farm--work out next year's production ideas for the main sub-branches under their management. As a result of the analytical work performed in this way, the large-scale annual plan concept of the farm is born.

The managers of the self-accounting units begin to work out the plans of these units given their knowledge of the large-scale plan concept. The plan follows formally (by printed matter) the building up of the farm plan.

It is the task of the business management department operating at the farm center to offer, in this period, assistance, coordinate relations along the

self-accounting units, create continuous awareness of the central goals, and of course coordinate the finished plans.

Material incentive is linked to the plan targets of the self-accounting units. Care must, therefore, be taken to see that the planning does not become a form of plan bargaining in which the "more clever" self-accounting units may from the beginning create for themselves a more favorable position for fulfilling the plan. The attainment of this is promoted by the development of accelerated but achievable plan targets. The degree of acceleration is 10 to 15 percent as compared to the "official" plan. This means that the total plan of nine self-accounting units exceeds by this much the farm plan. A greater degree of acceleration is not advisable because the plan would lose its incentive character.

This "acceleration" is needed because if the self-accounting units should lag behind the plan this would not endanger the farm plan fulfillment. On the other hand, it could happen that despite a plan that was not fulfilled at the enterprise level the self-accounting units would fulfill their plan tasks, and by pointing to this they could demand payment of the targeted material incentives.

Inventory Evaluation

The evaluation of inventories produced by agricultural operations themselves is a much-debated question. During planning work, this is of interest to the extent that we must achieve the following with prices used in planning:

--accounting at unified prices of inventories to be consumed,
--comparability of the costs of the individual self-accounting units,
--the interest of the self-accounting units in quality grading, in harvesting and using byproducts, and in the sale of products.

They solve this at the Komarom farm, for example, by planning and accounting the purchased inventories not at the same accounting price but at the purchase price. The differences in the acquisition price, that is, the difference between the accounting price and the actual acquisition price, which because of the frequent and large-scale price changes may even amount to millions, can in this way be reduced to the minimum.

In the case of inventories produced by the producers themselves, industrial products are planned and accounted for in mid-year at accounting prices developed at the level of state marketing prices. The achievements of the auxiliary operations are calculated at accounting prices developed at the level of the planned prime cost. In the case of products with an official price (meat) and in the case of products belonging to a free price form, industrial products are calculated in plan and accounting according to cost calculation. (Thus in the case of self-accounting units, profits in industrial activity are formed theoretically only in marketing.)

Mid-year prices in the farm balance, of course, are corrected in accordance with prevailing prescriptions of the inventory evaluation.

The forms and substantive signs of the annual plans of self-accounting units scarcely differ from the annual farm plan. The difference is represented by already discussed price application methods and the depth of result planning.

With the setting up of the annual operation plan, the self-accounting units prepare, with a completely identical content, the production costs, yields, and commodity production plans belonging to their operational areas, the maintenance and auxiliary operation budget and the achievement target for their self-accounting unit.

Unified Wage Regulation

The plans of the self-accounting units include, moreover, the general sub-branch costs linked to producer activities and plan index numbers for general costs related to the management of the self-accounting unit. In fact, the production taxes, price supplements and subsidies are built into the plan for the commodity output in proportion to the planned receipts.

One of the characteristic features of the self-accounting units within the farm is their independent manpower management. The managers of the self-accounting units are invested, therefore, with employer rights in a sphere of authority transferred from the farm director.

There is a unified wage regulation valid for very production unit of the farm. Thus there is no question of a free wage regulation, because within the farm this could lead to wage tensions or to a possibly undesirable manpower migration among the self-accounting units. Between the extremes of centrally prescribed wage regulation and completely independent wage management by the self-accounting units, the Komarom farm found a sound middle road by handling about 5 to 8 percent of the annual, planned wage bill of the self-accounting units as so-called mobile wages. The managers of the self-accounting units decide on its use for the payment of incentive surplus wages in the case of specially important jobs and for quantity and quality awards to good workers, and so forth.

Accounting System

The farm has developed instructions for the reporting and evaluation of the managing activities of the self-accounting units and the related information system.

Processing and servicing of basic data takes place through a closed system of accounting; the bookkeeping data include all the data necessary for preparing the evaluation. For this reason, the invoices for the place of the cost and bearer of the cost are broken down by self-accounting units.

The evaluations are prepared monthly on the basis of the general ledger summary. Managers of the self-accounting units report quarterly, in self-evaluation form, on the management of the production units under their control.

For measuring and evaluating the plan fulfillment of self-accounting units, the state farms up to now have used a comprehensive table which has proved the best in the report system and which is none other than No 21 and 25 tables of the annual operational plan in revised form. With this method, therefore, they make a virtue of necessity because the data which served exclusively external information up to now have been built into the enterprise plan.

This table gives a comprehensive, monthly picture of the managing activity of the self-accounting unit, of the situation in the fulfillment of the result plan by the self-accounting unit, and shows excesses and savings in costs and yield. By comparison with the evaluation prepared for the identical period of the previous year, it also makes forecasts possible.

Award and Sanction

The establishment of self-accounting units has made it possible, and at the same time necessary, to place the material incentive system on new foundations. The interest of the managers is linked decisively to the fulfillment of the accepted or approved plan. The aimed-for premium or award has been set at a 3:2 ratio like the premiums for upper level enterprise managers, that is, 60 percent premium and 40 percent award.

Forty percent of the premium is paid on the basis of the total fulfillment of the result plans of the self-accounting unit or the main sub-branch, 30 percent on the basis of the fulfillment of the result plan for 100 forints in cost, 10 percent on the basis of the developments in the quantitative indexes with the most important characteristics. Thus 80 percent of the premium depends clearly on the activity of the self-accounting unit. The remainder is paid according to the accident situation and the development of the brigade situation.

In case of plan overfulfillment, the premium may increase by a maximum of 50 percent, but if the sub-branch lags behind the profit plan the premium may also be reduced by 40 percent.

Thirty-five percent of the awards are paid if the planned wage fund and level is maintained, or if the exceeding of the wage level is accompanied by the same degree of wage bill savings. However, if the wage level excess is not accompanied by a savings in the wage bill, the award is reduced by 15 percent; and if there is a wage bill excess, or if the increase in the wage level exceeds 1.5 percent, the award may be reduced by 30 percent.

The Komarom farm does not regard the independent accounting system and its elements as final. These will be further developed in accordance with the economic environment and changes in material and technical conditions.

6669
CSO: 2500/133

PRELIMINARY FIGURES IN AGRICULTURAL RESULTS PUBLISHED

Budapest FIGYELO in Hungarian 10 Feb 82 p 13

[Article by Dr Ferenc Leszak: "Preliminary Figures on the 1981 Balance"]

[Text] According to the preliminary data of MEM-Stagek [Statistical and Economic Analysis Center, Ministry of Agriculture and Food Industry], farms had more working capital and greater development funds available than formerly. The starting stock of the reserve and the security fund was also considerably greater than in 1980. All these things improved the conditions for the financing of 1981 production and increased the security and flexibility of agricultural management.

Because of the rise in prices for materials and energy sources, the production costs of large farms rose in 1981 altogether by 10 to 11 percent as differentiated by activity groups. The increase in expenditures linked to products for basic activity was more moderate while the ratio of industrial activity was greater.

The farms used their supplementary outlays, in accordance with incentive relations, chiefly to increase supplementary activity and less to increase agricultural production. For example, in 1981, as compared to the previous year's level (lowest since 1975), fertilizer purchases increased only by 1 to 2 percent. As a consequence, the producing capacity of the soil will not be adequate to the production yields planned for the Sixth Five-Year Plan period.

Because of the unfavorable weather and the decline in sown area, crop production lagged behind the targets of the economic plan, and as a matter of fact, according to preliminary data, it will not even reach the 1980 level. It is of great importance in the management of large farms that in crop production the purchasing price level of producer means increased to a greater extent in 1981 than in the case of products. Therefore, the profitability of various important sub-branches was further reduced as a function of energy and industrial material intensiveness.

Average corn production was greater than ever before, and this countered in part not only the decreased sowing areas but also a production drop in cereals. But even so, grain production lagged 8 to 9 percent behind that of 1981.

Industrial crops continued to improve, primarily because of the interest in sunflower seed production.

The weather was not favorable for grape or for some fruits. However, apple production was better than planned, and thus fruit production was around the 1980 level. Grape production declined by 20 to 25 percent as compared to 1980, but the favorable autumn weather influenced the quality of wine and its price advantageously.

Specific yields improved in large scale livestock breeding. Production in the main sub-branch increased by 2 to 2.5 percent. Cattle, pig and sheep stocks also increased as compared to 1980. Poultry stocks remained essentially the same.

In butcher meat production there was a somewhat different trend than in livestock changes. On most large farms, beef cattle breeding was not profitable. Pork production and marketing remained at the 1980 level. According to purchasing data, mutton sales increased to the greatest extent, by about 5 to 6 percent. In the dressed poultry field, production rose in response to the more favorable export possibilities.

Among animal products on large farms, milk production and sales continued to grow the most dynamically.

On balance, 40 to 50 percent of the production increment in large-scale animal breeding came from livestock breeding, and 50 to 55 percent from product output.

As a result of the increase in production and income incentive, the supplementary activity of large farms increased in 1981 by 8 to 10 percent as compared to the previous year.

A significant share of the farms countered the revenue decline in crop production --chiefly in cereal grain and grapes--by changes in the production structure, by a reduction in specific energy and material use, and to a significant extent by supplementary activity. Thus enterprise results developed more favorably than expected and will, it is anticipated, approach the 1980 level.

According to preliminary surveys, total results on state farms, as compared to 1980, increased by 4 to 5 percent while on cooperatives they declined moderately by 3 to 4 percent. It is anticipated, however, that the losses will increase on state farms and decline on cooperatives by one-half to what it was in 1980.

Budgetary withdrawals increased because of growth in gross income. Therefore, the enterprise-destined results--serving to form funds--became smaller in both sectors than in 1980. A survey by the MEM-Stagek shows that with the exception of the obligatory reserve fund there was generally less money for the enterprise funds than the year before.

The state farms devoted twice as much to increasing the reserve funds as in 1980. On the other hand, the development fund was 17 percent less than in 1980. The sharing fund increased by 2 to 3 percent as a function of the increase in enterprise results. Total personal income and average level was 8 percent greater than in 1980.

In 1981, the cooperative reserve and security fund increased by 16 percent as compared to 1980, while the development fund declined by 18 percent. As a consequence of the decrease in results, the sharing fund, it is anticipated, will be 10 to 11 percent less than in 1980. In the cooperatives, total personal income in 1981 surpassed by 7 to 8 percent the amount for 1980 (close to the increase for state farms), while the per capita amount increased to a lesser extent, or by 6 percent.

6691
CSO: 2500/133

MODEL FOR ECONOMIC DEVELOPMENT TO 1990 PUBLISHED

Warsaw GOSPODARKA PLANOWA in Polish No 10, Oct 81 pp 437-443

[Article by Zdzislaw Sadowski, Joanna Kotowicz and Andrzej A. Szeworski: "Variant Forecast of Poland's Basic Economic Ratios to 1990"]

[Text] 1. Basic Restrictions on the Process of Economic Development During the Current Decade

A determination of the future forming of macro-economic ratios of the country's development necessarity contains a considerable element of conventionality. At the present time[1], the forecast must take as its starting point the conditions that exist in a situation of deep crisis in 1981. The extent and nature of this crisis are to a large degree determined by:

a) the unprecedented share of foreign-debt servicing in the balance of payments,

b) the high degree of underutilization of producer goods due to shortages of fuel and raw materials, and also due to faulty structure,

c) the wide and growing inflationary gap on the consumer-goods market.

Because of these factors, the number of choices of direction for future economic strategy and probable scenarios of the course of economic processes is very limited.

The foregoing study was based on the assumption that the main restriction during the coming period is the forming of the balance of payments with capitalist countries. Thus, attention has been concentrated on an analysis of the forming of macro-economic ratios from the standpoint of assumed variants of economic strategy in the domestic sphere.

As the criterion for the selection of alternative scenarios of strategy, we have taken the moment that the process of debt-clearing in the national economy begins, i.e., the decline in the share of debt servicing in the balance of payments. Guided

[1] The work was done in February, 1981

by this criterion, we examined three test scenarios of principle macro-economic ratios to the year 1990:

a) a "cautionary" variant--the base variant,

b) a variant which assumes that the growth rate of industrial production will increase,

c) a variant which assumes postponement of payments on debt-servicing (2- and 5-year moratoriums).

The base variant, regarded as a cautionary scenario, envisages continuation of foreign-debt incurrence in order to stimulate growth of imports, which, by increasing the growth rate of industrial production and growth of exports, would lead to a decline in share of incurred debt servicing in exports. This variant is unrealistic for two reasons:

a) due to the country's weakened credibility on the world's capital market, the availability of foreign credit is becoming increasingly limited,

b) under expectations as to the possibility of a quick and fundamental improvement in management efficiency, before pro-export results of the incurred credits would appear, there would be a dangerous growth in the indebtedness spiral and further growth in the share of incurred debt servicing in exports would have to occur.

This variant was included in the analysis and regarded as a point of issue specifically to demonstrate the internal reasons for its lack of realism; it could not be used as a scenario of strategy even if further credits were obtainable under existing conditions. It may, thus, be regarded as one of the extreme variants. Analysis of the more realistic variants showed that their common characteristic is the maintenance of a very low growth rate of consumption during the entire period under study (and even, temporarily, an absolute drop in consumption), although the rates of growth are obviously different. At the same time, the underutilization of production capabilities remains, due to lack of corresponding import capabilities.

The overall picture would be more favorable if it could be assumed that in a relatively short time a considerable improvement in management efficiency would occur, demonstrated by a sharp reduction in the coefficient of the economy's imports- and exports-intensiveness. This may be related to changes in the structure of investment, production and employment. In the foregoing study, these possibilities were considered only to some degree in the assumptions pertaining to the forming of the right model coefficients. The model permits us to make these assumptions more optimistic than they were when they were accepted for analysis. We have not seen sufficient premises for this aside from our own desires.

The assumption was made, therefore, that meaningful results of changes in the system of the economy's functioning, made during the transition period, may not appear until the final years of the 10-year period under study.

By analyzing the three test scenarios, we ascertained that the base variant, envisaging stabilization of imports, should be contrasted with the scenario oriented towards a highly restrictive imports policy: this is the drastic-reduction-of-imports variant. This variant, just as the base variant (although for a totally different reason) also may be impossible to apply in practice, but it was deliberately presented to show the results of a very keen attempt to eliminate the deficit in the balance of payments when there are no possibilities of a rapid increase in the growth rate of exports.

Thus the two contrasting hypothetical variants, although they are both unrealistic and extreme, indicate the field in which the correct politico-economic solution must be found.

2. Description of the Research Method

A simulation model, MODO-3, which is based on a method of systems dynamics and is written in the Dynamo[2] language, was used in the research.

The current version of this model is comprised of approximately 100 equations. We refer those interested to the description of the model and show its more important interconnections in Figure 1.

Among the exogenous variables of the model (shown in double frames in Figure 1), we can distinguish decisionmaking variables, of which imports is the most important, and model coefficients, whose size is determined on the basis of empirical data and assumptions as to their anticipated forming in the future.

The following is a brief discussion of several of the more basic model interconnections:

1. Interconnection between imports and total production. The interconnection between size of total production and size of imports is shown by means of the variable "production capabilities determined by imports" (14). The exogenous variables were taken to be the size of imports from socialist and capitalist countries and--in the present version of the model--the ratio of total production to imports (15), showing efficiency, or the reverse of production imports-intensiveness[3].

3. Interconnection between investments and total production. The dependence of total production on investments is expressed by the variable "production capabilities determined by investments" (6). This is determined by investment outlays

---

[2] A detailed description of this model can be found in the article by Z. Sadowski, J. Kotowicz and K. Cwalina, "An Experimental Model of General Growth Ratios in the National Economy, MODO", GOSPODARKA PLANOWA, No 9, 1979. The version of the model now used contains several improvements, but the general logic of the model is the same.

[3] In the version described in the cited article, coefficient (15) was the ratio of rates of growth of total production and imports. The change in form of dependency was due to the difficulty of forecasting elasticity coefficients as the sizes which they depicted underwent anisotropic changes, which occurred recently in the case of growth rates of total production and imports.

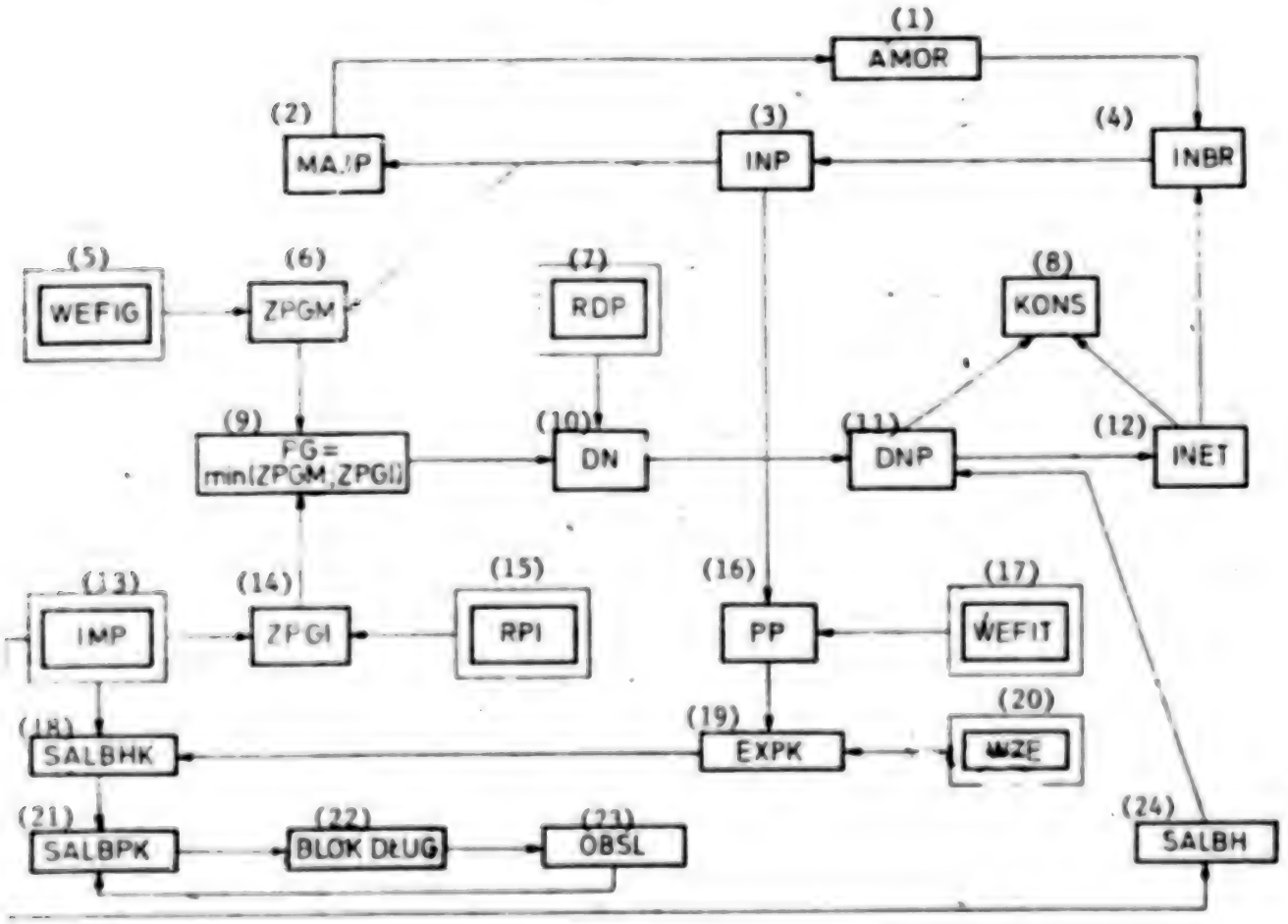

Figure 1. A Simplified Interconnection Diagram for the MODO Model

Key:

1. Amortization
2. Producer goods
3. Production investments
4. Gross investments
5. Investment efficiency coefficient
6. Production capabilities determined by investments
7. Materials-intensiveness coefficient of national income
8. Consumption
9. Total production = min (production capabilities determined by investments and imports)
10. National income
11. Distributed national income
12. Net investment
13. Imports
14. Production capabilities determined by imports
15. Ratio of value of total production to value of imports
16. Industrial production
17. Industrial investment efficiency coefficient
18. Balance of trade with capitalist countries
19. Exports to capitalist countries
20. Export capabilities coefficient
21. Balance of payments with capitalist countries
22. Block of equations determining size of debt at a given period taking into account repayments and new credits
23. Debt servicing
24. Balance of trade

..., taking into account a 2-year time delay, and also by the exogenously ... production investment efficiency coefficient (5). Other exogenous variables ... this interconnection are the coefficients of sector structure of investments and ... share of non-production investments in gross investments.

... Interconnection between balance of payments and size of debt servicing. Debt servicing is dependent on the total sum of the indebtedness, which is made up of ...g- and short-term credits. The total sum of the debt in a given year is deter- ... by the credits of the preceding 8 years remaining for repayment. There is a feedback between the size of debt servicing and the balance of payments with capitalist countries.

... of this balance is also determined by the trade and service turnovers balance.

... Interconnection between investments and the balance of trade. Two important exogenous variables appear in the interconnection. The coefficient of exports capabilities (29), which is the ratio of the size of exports to capitalist countries ... the size of industrial production, and coefficient (17), understood to be the ... of industrial production growth to investment outlays incurred 2 years earlier.

An increase in industrial production has a bearing on an increase in exports. Larger exports, reducing the unfavorable balance of foreign-trade turnovers, have a negative effect on the size of the national income for distribution. On the other hand, they make it possible to change the assumptions pertaining to imports, which may have an effect on increasing the national income for distribution. And so we are dealing ... with two feedback loops going in opposite directions. The level of distributed national income then determines the size of net and gross investment outlays. ... the model, the share of the consumption fund in the national income for distribution is the resultant quantity.

... Test Scenarios in the Strategy of Development in the Transition Period and During ... 5-Year Period 1986-1990

... variant--"cautionary". In the base variant it was assumed that imports from ... countries during 1981-1985 would remain at the first-year, 1981, level. ... is that the economy will continue to be dependent on external ... of financing.

... possibility of stabilizing imports, the feedback between the size of ... capitalist countries and the level of public consumption becomes a very ... ... in directing the strategy of development. A choice appears ... preservation of consumption at the entry level at the expense of a lower ... imports to capitalist countries, and orientation towards increasing ... of exports, with a further reduction in the level of consumption.

... these possibilities may encounter a strong social barrier. That ... acknowledged it to be very improbable and have ignored it in our fur- ... ...

As a base variant, therefore, we have accepted the first of the possibilities mentioned. We have assumed a relatively low growth rate of exports to capitalist countries during the transition period, with a stabilization, and after 1985 a gradual improvement, in the growth rate of consumption.

In the base variant we have also assumed that in the 10-year period under study, a moratorium will be negotiated on foreign-debt servicing payments. This means that it will be necessary to negotiate more credits to cover existing obligations and the continued growth of share of debt servicing in the balance of payments, up to a level double that of the size of foreign-exchange revenues from exports in the last year of the 10-year period. That is why we have called this scenario the "cautionary" variant.

We have also hypothetically assumed that the new principles that have been applied in the planning and management system--despite certain favorable changes in materials- and imports-intensiveness of production and investment efficiency--will not bring about a significant improvement in the growth rate of exports, thus reducing the share of debt servicing in exports.

Assumptions on the forming of basic model coefficients in the imports-stabilization variant are as follows:

--a halt, during the transition period and until 1984, in growth of imports-intensiveness of production, with a gradual decline after 1985, i.e., an increase in the efficiency of coefficient (15) as a result of changes made in the planning and management system,

--stabilization of the materials-intensiveness coefficient of national income (7) during the transition period and until 1984, at the 1980 level, i.e., halting the growth of materials-intensiveness of production during this period mainly as a result of applying immediate efficiency-improvement measures. It is assumed that after 1985 there will be a gradual drop in materials-intensiveness resulting from application of a new mechanism for controlling an enterprise,

--stabilization of the coefficient of the share of net investments in national income (12) at the 14 percent level until 1984, with a gradual increase of 1 percent annually after 1985,

--gradual improvement in the investment efficiency coefficient (5) during the entire period under study, except that during the transition period, until 1982, this coefficient will have have an unfavorable value, in 1983 it will be equal to zero, and not until after 1985 will it assume a favorable value,

--gradual growth in exports capabilities coefficient (20) during the entire period under study. After the phase of steep decline in industrial production and "forced"

exports to maintain the past level of exports capabilities, a slight improvement in the coefficient was assumed, related to possible improvement in the efficiency of exports to capitalist countries[4].

In trade turnovers with capitalist countries, it was assumed that the size of imports from capitalist countries until 1985 would stabilize at the 1981 level, and that after 1985 they would slowly grow until towards the end of the period, the 1980 level would be reached.

Observation of the imports-stabilization variant suggests the following conclusions:

a) Conducting a mildly restrictive imports policy in the forms of imports stabilization at the first-year level means--if exports capabilities remain unchanged--that it will be necessary to continue to obtain new financial credits to reschedule the debt and trade credits to equalize the balance of trade,

b) During the transition period, no significant improvement in the exports capabilities of the economy should be expected in view of the supply barrier that is occurring (raw and other materials), which slows down the growth of industrial production, including pro-export production. As a consequence, therefore, we cannot expect a reversal in the tendency towards a further large increase in the share of debt servicing in the balance of payments coefficient (23), which also points to the unreality of the variant and the main problem which must be solved.

c) Under these conditions, increasing exports during the transition period and by so doing, slightly accelerating the process of clearing the debt, would be theoretically possible only at the expense of a further slowdown in consumption, which would encounter an unsurmountable social barrier.

The increasing-the-growth-rate-of-production variant. We regarded the previously proposed variant of forming of ratios of development to be the base for the creation of subsequent variants. The unfavorable forming of the debt servicing coefficient, as well as the balance of trade with capitalist countries, persuaded us to search for a way to improve this situation by way of increasing the growth rate of exports to capitalist countries by increasing the growth rate of industrial production.

[illegible]

[illegible]It may be assumed that further improvements in the exports capabilities coefficient will be obtained as a result of exports of unutilized machinery and equipment and also as a result of increasing the trade turnovers with socialist countries by making those production capabilities that are not being utilized available to our partners (exports of finished products produced to fill orders from contracting parties from raw materials furnished by them). (See discussion, "Do we Have to be in Debt?", ŻYCIE GOSPODARCZE, No 50, 1980.)

The anticipated scale of exports arises from both of the above operations, however this does not warrant significant corrections in the assumptions. In turnovers with socialist countries, a constant level of balance of trade was assumed for the entire period under study, at a constant growth of imports by 1 percent annually.

Table 1. Forming of the National Income, Exports and Imports With Capitalist Countries and the Balance of Payments and Debt During 1980-1990 (in billions of foreign-exchange zlotys; current prices)

		1980	1981	1982	1983	1984	1985	1986	1987	1988	1989	1990
	(1) WARIANT BAZOWY											
(5)	*IMPK* — import z KK	27,6	24,7	24,7	24,7	24,7	24,7	25,5	26,0	26,5	27,0	27,5
(6)	*EKSPK* — eksport z KK	24,2	23,9	23,4	23,3	23,5	24,6	24,9	25,9	26,8	28,0	29,5
(7)	*DNW*[a] (mld zł) — dochód narodowy wytworzony	1670,1	1578,8	1536,7	1524,0	1532,2	1559,9	1602,5	1651,0	1712,1	1777,8	1843,6
(8)	*DŁUG*	65,1	73,2	79,5	86,7	94,6	103,0	111,7	121,0	130,8	140,8	151,0
(9)	*SALBPK* — saldo bilansu płatniczego z KK	—26,1	—26,8	—30,1	—33,1	—34,6	—38,0	—41,9	—44,8	—47,7	—50,0	—54,1
(10)	*DŁUG* z moratorium 2-letnim	65,1	73,2	79,5	86,7	94,6	103,0	111,7	121,0	130,8	140,8	151,0
(11)	*SALBPK* z moratorium 2-letnim	—26,1	—26,8	—7,2	—9,3	—34,6	—38,0	—41,9	—44,8	—47,7	—51,1	—54,3
(12)	*DŁUG* z moratorium 5-letnim	65,1	73,2	79,5	86,7	94,6	103,0	111,7	121,0	130,8	140,8	151,0
(13)	*SALBPK* z moratorium 5-letnim	—26,1	—26,8	—7,2	—9,3	—11,7	—14,3	—17,8	—43,6	—47,5	—56,9	—54,1
	(2) WARIANT DYNAMIZACJI PRODUKCJI											
(5)	*IMPK*	27,6	24,7	24,7	24,7	24,7	24,7	25,5	26,0	26,5	27,0	27,5
(6)	*EKSPK*	24,2	23,9	23,4	23,3	23,5	24,4	25,6	27,1	28,8	30,7	33,2
(7)	*DNW*[a] (mld zł)	1670,1	1578,8	1536,7	1524,0	1532,2	1559,9	1602,0	1651,0	1722,0	1809,8	1909,4
(8)	*DŁUG*	65,1	73,2	79,5	86,7	94,6	103,0	111,3	119,9	128,2	136,1	143,1
(9)	*SALBPK*	26,1	—26,8	—30,1	—33,1	—35,8	—37,9	—40,8	—43,2	—45,2	—46,8	—47,8
(10)	*DŁUG* z moratorium 2-letnim	65,1	73,2	79,5	86,7	94,6	103,0	111,3	119,9	128,2	136,1	143,1
(11)	*SALBPK* z moratorium 2-letnim	—26,1	—26,8	—7,2	—9,3	—34,6	—37,6	—40,9	—43,1	—44,8	—46,8	—48,0
(12)	*DŁUG* z moratorium 5-letnim	65,1	73,2	79,5	86,7	94,6	103,0	111,3	119,7	128,0	135,8	142,9
(13)	*SALBPK* z moratorium 5-letnim	—26,1	—26,8	—7,2	—9,3	—11,7	—13,9	—16,9	—41,9	—44,7	—46,6	—47,7
	(3) WARIANT GWAŁTOWNEGO OBNIŻENIA IMPORTU											
(5)	*IMPK*	27,6	12,3	12,4	16,4	20,0	24,7	25,5	26,0	26,5	27,0	27,5
(6)	*EKSPK*	24,2	23,9	23,4	23,3	23,5	24,4	25,6	27,1	28,8	30,7	33,2
(7)	*DNW*[b] (mld zł)	1690,7	1692,0	1651,4	1719,3	1761,3	1831,3	1881,8	1938,3	2010,0	2087,0	2164,4
(8)	*DŁUG*	65,1	73,2	67,1	61,0	58,5	59,2	63,8	68,3	72,3	75,3	77,2
(9)	*SALBPK*	—26,1	—14,5	—14,3	—17,0	—19,2	—22,1	—23,3	—24,2	—24,2	—23,9	—22,9

[a] 1980 prices

[b] 1981 prices

Key:

1. Base variant
2. Increasing-the-growth-rate-of-production variant
3. Drastic-reduction-in-imports variant
4. Without a moratorium
5. Imports from capitalist countries
6. Exports to capitalist countries
7. Generated national income (billions zlotys
8. Debt
9. Balance of payments with capitalist countries
10. Debt, with 2-year moratorium
11. Balance of payments with capitalist countries, with 2-year moratorium
12. Debt, with 5-year moratorium
13. Balance of payments with capitalist countries, with 5-year moratorium

assumptions made on the forming of imports, the structure of investments and the [illegible] of investments in the national income, were the same as in the preceding variant. However, more optimistic assumptions were made as to the effects of systems-type changes made within the framework of planned economic reform and better utilization of producer goods. A faster rate of decline in materials-intensiveness of national income in the last 3 years of the decade was assumed, which was reflected in the more rapid, compared with the preceding variant, growth of national income during these years. It was assumed also that there would be an earlier and more distinct, than in the preceding variant, improvement in the industrial investment efficiency coefficient (17), which would express, for example, a gradual release of the frozen, or not fully utilized, producer goods. As a result, we obtained an increase in the rate of industrial production during 1985-1990, compared to the preceding variant. In turn, this growth facilitates an increase in the rate of exports to capitalist countries, whose growth rate exceeeds the growth rate of industrial production by almost one point during successive years. National income for distribution, however, initially grows somewhat more slowly, in view of this, than in the base variant, which is seen in the slower growth of consumption during 1985-1987. But there is a distinct improvement in the balance of trade with capitalist countries and the debt servicing coefficient, which reaches a maximum value in 1988 and then begins to drop. The proposed variant of increasing the growth rate of production, although it gives a certain improvement in the ratios, still retains this fundamental defect: it leads to the beginning of the decline in the share of debt servicing for exports too late; this share remains so large over the next few years that it continues to require that new, and very large, credits must be obtained. The assumption on increasing the growth rate of production, therefore, brings results too late for this scenario to solve the main problem of the base variant.

The variant postponing repayment of foreign credits. In this situation, an examination of the effects of the possible negotiation of a moratorium on debt instalment payments appeared to be indispensable. We considered two cases: a 2-year moratorium, covering 1982-1983, and a 5-year moratorium, covering 1982-1986. We have accepted a simplifying assumption that the moratorium will apply to all of the debt arising from medium- and long-term credits at the end of 1981, but will not apply to the interest. During the period of the moratorium, payments of capital instalments are suspended, but interest accrues and is paid. In addition, payments on [illegible] credits obtained during the moratorium period will not be deferred[5].

[illegible] variant was superimposed on the previously discussed two variants, [illegible] the assumption that imports from capitalist countries would be stabilized. What effects of the moratorium were observed?

[illegible] the moratorium for 1982-1983, suspension of capital instalment payments during these years quite substantially reduces the size of the balance of [illegible]. But the assumption of imports stabilization is so strong, that this [illegible] continues to form unfavorably, because the unfavorable balance of trade with capitalist countries continues, and, in addition, the share of the debt burden

---

[illegible] assumptions, certain changes had to be made in the logic of the [illegible], which we will not go into because they are extremely detailed.

resulting from the interest on credits also continues. As a consequence, the debt servicing coefficient falls greatly (from 112 percent in 1981 to 29 percent in 1982), but only during the period of the moratorium, after which it returns almost to the previous level. This applies to both of the examined variants.

It should be mentioned here that we have made still one more simplifying assumption--that the interest rate will not change. In reality, the moratorium may bring with it an increase in the interest on new credits, which continue to be indispensable. A moratorium based on the assumed principles, therefore, only relieves the economy of the necessity to obtain huge credits to service the debt for 2 years. After the moratorium expires, the situation returns to the same level as in the previously discussed variants, and the future course is analogous--in the base variant there is no reversal of the tendency for continuous growth of the debt servicing coefficient, and in the increasing-the-growth-rate-of-production variant this coefficient reaches a maximum in 1988 and then begins to drop.

If we assume that the interest on the credit (the cost of the moratorium) increases, than the share of debt servicing for exports (and the entire debt) will increase accordingly.

The 5-year, 1982-1986, moratorium, has the same effect. During the moratorium, the debt servicing coefficient forms not only as a result of the unfavorable balance of trade with capitalist countries and the growing interest on unpaid credits, but also as a result of payments of instalments and interest on credits obtained to cover the unfavorable balance of payments during the moratorium. The debt servicing coefficient drops sharply in the first year of the moratorium, i.e., 1982 (to 29 percent), but immediately begins to rise again and in the last year of the moratorium it amounts to 70 percent. In the first year after the moratorium has ended (1987), it grows sharply, returning to a level of over 160 percent--to the line of the trend that prevailed before the moratorium.

It ultimately develops that the function of the assumption of stabilization of imports is so strong, that the moratorium, on the conditions that were assumed, only slightly improves the situation relating to the country's high foreign debt and the servicing of this debt. In addition, this is an improvement of short duration, which creates no prospects for breaking the vicious debt cycle.

An analysis of the test variants has thus shown that the solution should be sought in a sharp reduction in imports from capitalist countries, since the efficacy of other measures aimed at improving the balance of payments seems to be slight, if realistic assumptions are made.

The drastic-reduction-of-imports variant. The second extreme variant of strategy for the 1980's is the scenario in which there is a drastic slowdown in imports from capitalist countries in 1981 and 1982, a reduction of 15 billion foreign-exchange zlotys in comparison with 1980. Imports then increase gradually, in 1985 reaching the 1981 level in the base variant, and, finally, at the end of the decade, the 1980 level.

Table 2. Growth Rate of National Income, Consumption and Investments During 1980-1990

(1) Lata	1980	1981	1982	1983	1984	1985	1986	1987	1988	1989	1990
(2) WARIANT BAZOWY											
(5) *SWDN*	−5,0	−5,5	−2,7	−1,0	0,5	1,8	2,7	3,0	3,7	3,8	3,7
(6) *SWDNP*	−3,2	−8,3	−2,3	−0,7	0,4	1,4	2,6	2,6	3,2	3,3	3,0
(7) *SKONS*	0,4	−4,0	0,6	−0,7	0,4	1,4	1,4	1,4	1,9	2,0	3,0
(8) *SINET*	−13,4	−25,3	−16,5	−0,4	0,4	1,4	10,0	9,5	9,8	9,3	2,8
(3) WARIANT DYNAMIZACJI PRODUKCJI											
(5) *SWDN*	−5,0	−5,5	−2,7	−1,0	0,5	1,8	2,7	3,0	4,3	5,1	5,5
(6) *SWDNP*	−3,2	−8,3	−2,3	−0,7	0,4	1,0	2,3	2,2	3,4	4,0	4,2
(7) *SKONS*	0,4	−4,0	0,6	−0,7	0,4	1,0	1,1	1,0	2,1	2,7	4,2
(8) *SINET*	−13,4	−25,3	−16,5	−0,4	0,4	0,9	9,6	9,0	10,0	10,5	4,1
(4) WARIANT GWAŁTOWNEGO OBNIŻENIA IMPORTU											
(5) *SWDN*	−5,0	−13,7	−2,4	4,1	2,4	4,9	2,7	3,0	3,7	3,8	3,7
(6) *SWDNP*	−3,6	−23,9	−2,2	8,0	5,3	7,0	2,4	2,4	2,9	2,9	2,6
(7) *SKONS*	0	−23,6	−5,3	8,0	5,3	7,0	1,2	1,1	1,6	1,6	2,5
(8) *SINET*	−13,3	−25,3	−31,3	8,0	5,4	7,1	9,8	8,9	9,5	8,9	2,7

Key:

1. Years
2. Base variant
3. Increasing-the-growth-rate-of-production variant
4. Drastic-reduction-of-imports variant
5. Growth rate of generated national income
6. Growth rate of distributed national income
7. Consumption growth rate
8. Net investments growth rate

Table 2. Debt Servicing Coefficient (in percentage) During 1980-1990

(2) Wariant \ (1) Lata	1980	1981	1982	1983	1984	1985	1986	1987	1988	1989	1990
(3) Wariant bazowy	97	112	126	130	150	160	168	176	183	189	193
(4) Wariant bazowy z moratorium 2-letnim	97	112	28	37	145	159	169	176	182	189	193
(5) Wariant bazowy z moratorium 5-letnim	97	112	28	37	48	60	72	171	181	188	192
(6) Wariant dynamizacji produkcji	97	112	126	139	150	157	163	166	168	167	163
(7) Wariant dynamizacji produkcji z moratorium 2-letnim	97	112	28	37	145	156	163	166	166	167	164
(8) Wariant dynamizacji produkcji z moratorium 5-letnim	97	112	28	37	48	59	169	161	166	166	163
(9) Wariant gwałtownego obniżenia importu	97	112	111	106	100	92	94	96	95	92	88

Key:

1. Years
2. Variant
3. Base variant
4. Base variant with 2-year moratorium
5. Base variant with 5-year moratorium
6. Increasing-the-growth-rate-of-production variant
7. Increasing-the-growth-rate-of-production variant with 2-year moratorium
8. Increasing-the-growth-rate-of-production variant with 5-year moratorium
9. Drastic-reduction-in-imports variant

In the variant under discussion, we also made a basic change in the materials structure of imports from capitalist countries, as compared with assumptions contained in the base variant. In the base variant, two-thirds of the imports from capitalist countries were supply imports, with one-third comprising the others (including investments). In the "drastic reduction" variant, we assumed a reduction of the others to zero, and a one-sixth reduction of supply imports. For 1982-1984, we assumed a growth in volume of imports from capitalist countries to the size corresponding to its level in 1985, assumed in the base variant, and a return to its structure as in the base variant.

On the basis of the assumptions made pertaining to the structure and size of imports, we have calculated a value for the imports efficiency coefficient for the "drastic-reduction-in-imports" variant. We have also assumed that the trend of changes in this coefficient corresponds to the imports efficiency coefficient trend in the base variant.

Another important assumption of this variant was the assignment of a value to the exports capabilities coefficient, which allowed the growth rate of exports to capitalist countries to remain at a level enabling comparison with the base variant.

As a result, the drastic-reduction-of-imports variant makes it possible to immediately begin the process of reducing the debt servicing coefficient and clearing the economy's debt. But this process is slow and expires in 1985, which is reflected in the assumption that a gradual increase in imports will occur as early as 1983. After 1985, the debt again begins to grow, but due to the assumptions on the growth of exports, the debt servicing coefficient essentially has a declining tendency. The variant under discussion shows the drastic reduction in generated national income and industrial production in 1981, which, in view of the assumed retention of exports to capitalist countries at the 1980 level, leads to a still greater reduction of distributed national income and consumption. But already in 1983 a gradual growth in national income and industrial production begins, and remains quite uniform in the following years, although the growth rate of both these units is low. In turn, consumption, after a sharp drop in 1981, due to a slowdown in accumulation, increases rapidly over the next 4 years, reaching, in 1985, the 1980 level; after that, because of the need to again increase investments, its growth rate will stabilize at a rather low level.

The results of this variant indicate that in order to accelerate the process of reducing the share of debt servicing, the period of slowing down the growth of imports from capitalist countries, after the sharp reduction in 1981, must be extended. It must be noted, however, that acceptance of this variant of strategy would cause a longer period of slowdown in the growth tendency of the national income and the elements of its distribution, unless it was possible to effectively compensate the reduction of imports with an increase in management efficiency.

The process of reducing the debt servicing coefficient would also be more rapid if we would assume a higher growth rate of exports. However, under the highly restrictive imports policy, this would not be realistic and furthermore, it would have even greater repercussions on the level and growth rate of consumption.

Final Conclusions

In the light of the presented variants of strategy for economic development in the 1980's, the following observations can be made:

1. All of the scenarios of economic macro-ratios that we examined indicate the enormous scale of social costs that are unavoidable during the next 10 years, as a result of the excessive scale of investments during the preceding 10 years, investments financed in large measure from external sources.

In all of the variants studied, a decline and then stagnation, or a very gradual growth of consumption, is observed, and

--in the variant directed towards accelerating the debt-clearing process, greatly increasing the growth rate of exports and weakening the dependence on foreign credits (it may conventionally be called an "autarkic" scenario), we see a relatively deeper drop in consumption during the entire period under study,

--in the variant oriented towards continuing to supply the economy with increasing amounts of foreign credits, this drop is somewhat smaller than in the case of the "autarkic" variant. These variants, however, indicate a further sharp rise in the debt spiral, which must either be regarded as unrealistic or which, over the long term, will lead to greater economic imbalance and a weaker growth rate of consumption.

2. We can put forth the hypothesis that practical politico-economic solutions must be sought in combining the strategy of a drastic reduction in exports with an extended period of return to the "base level", with a moratorium on debt repayments. The effects of a highly restrictive imports policy could be accompanied by a somewhat lower, than in the drastic-reduction-of-imports variant, growth rate of exports to capitalist countries, which could bring with it a certain weakening of the sharp drop in consumption. Such a variant has not been examined yet.

3. The forecasting analyses conducted with the aid of the research instrument presented here, have made it possible to observe the scenarios of economic macro-ratios to 1990, formed mainly from the standpoint of different variants of strategy in the area of external economic relations.

We can put forth the hypothesis that in the sphere of internal economic strategy, the attainment, during the 1980's, of a certain improvement in the growth rate of public consumption, will be determined by two fundamental factors:

a) Implementation of comprehensive changes in the system of planning and managing the national economy, directed at broadening the self-dependence of basic economic elements,

b) Extensive restructuralization of the investment front, taken over from the 1970's, and the directions of production and employment.

Only these factors can effect an overall improvement in management efficiency and thus, in our model, make it possible to apply more favorable assumptions as to coefficients of efficiency, thus improving the overall results.

NEW REALITIES OF ECONOMIC REFORM CONSIDERED

Warsaw ZYCIE WARSZAWY in Polish 23-24 Jan 82 p 3

[Article by Czeslaw Bobrowski: "Second Phase of the Reform"]

[Text] Many assumptions have been made on the subject of economic reform throughout the past year. There were those who thought that the whole affair would amount to nothing and those who believed that the direction given by the Commission for Reform Affairs would become grossly distorted, etc. One group of economists and activists were demanding haste, without regard for any introductory considerations, and another group was stressing the necessity of preceding the reform with activities designed to restore equilibrium. In this respect a split compromise had insued, i.e., has been acknowledged that it did not make sense to wait for full equilibrium since the reform itself would favor a restoration of balance, however, on the other hand, it would be necessary to reduce the inflationary gap to such an extent that its size would not prove to be an obstacle in the course of the reform's introduction.

Writing in ZYCIE GOSPODARCZE" (21-22 November 1981) I have analyzed four possibilities and rejected three of them: introduction of reform without any additional safeguards; introduction of the reform by stages (for example in the manner it happened with the small-scale industry); and a postponement of the reform for three months while making better preparations of the safeguards and while conducting a brutal deflation (personally I was sympathetic to the latter, though I did not believe in the possibility of its approval).

However, it happened entirely different from what anybody could have imagined. Thanks to a resolute posture of the government--it is impossible here to omit the Premier, General of the Army W. Jaruzelski--the reform, in the sense of systems-type principles, became a fact on 1 January 1982, despite the fact that the legislative processes could not be completed in time and all the details have not been fully worked out (I'm thinking here about pricing instruments, fiscal matters, etc.). The imposition of martial law forced a suspension, for the duration, of workers' self government without additional introduction of other systemic changes. Because the legislative processes are proceeding in accordance with expectations of the reform builders (and additionally are introducing fortuitous corrections to the text presented by the government), it is becoming apparent that at the termination of the martial law the legal foundations and institutional regulations will be in complete accord with the assumptions.

New Realities

During the past three months important changes in the area of reform-activities conditions occurred. On the one hand some anti-inflationary price increases have been imposed (alcohol, gasoline) and were preceeded by an increase of tobacco prices. These changes, although conducted without compensation did not erase the inflationary gap but did, nevertheless, somewhat reduce its monstrous dimensions. This was not a brutal deflationary operation on the balance-restoring scale, however, it was a step in the right direction.

Unfortunately, phenomena or more precisely dangers acting in an opposite direction have also appeared at the same time. We did not manage to extricate ourselves from the commitments made in the understandings pertaining to the extension of our foreign-currency credits; this has endangered our chances for profitable new understandings. Even prior to the assumption and declaration of the extreme position of President Reagan, it had become apparent that we could not count on chances of feed grain purchases, on credit, from the USA, in amounts and on schedules which were necessary for us (in this respect Reagan's sanctions, stated subsequent to the imposition of martial law, represented only a minimal tightening of the USA position which was announced a little earlier). If we consider the dependence of our animal husbandry on the extent of our fodder imports, one can freely say that the conditions of our reform introduction have suffered a serious setback. Of a slightly smaller, but of no lesser, significance is the fact of the general difficulty, or at least a delay in regard to other transaction-type credits which are necessary to maintenence of a steady supply of raw materials and semi-finished goods on a desirable level. Aid from socialist countries reduces the impact of this aspect, but only in part, because these countries, in many cases, do not have commodities which could replace Western imports.

What can be presented in comparison to these negative aspects on the tally sheet of changes in conditions? A number of small, positive happenings can be shown (for example the good results in the sugar industry or some progress in the small-scale industry due to a change in prices for its products), but in reality only one item may be acknowledged as significant: an increase in coal production that has already been noted since November and has solidified during the period of martial law. There may be two more positive aspects or rather possibilities or expectations which are yet to be confirmed by facts. The first one is connected with the state of martial law and the halt of social unrest, sometimes expressed in the form of strikes (I do not consider this aspect as being the most important one, though occasionally its extent, during the fall, started to assume a dangerous scale), in lowering of the work discipline, unreliability of co-workers, in the erroneous ways of many of enterprise directors who cared not so much for production resluts as for avoiding, at all cost, any conflict with workers, in the growing ineffectiveness of the administration, etc. The press is quoting many examples of progress in this area, however, it is difficult to justify the generalization on that basis, to which I am partial, however, that is, we are witnessing an improvement in the economy in that, within the limits set by the supply situation, we are now exploiting our production possibilities in a better way.

The Supplier Decides

The second aspect is connected with economic reform; this problem is so new that one can only make assumptions. The freedom to set prices for a number of industrial products (both of agreed and regulated prices) should facilitate a proper allocation of the production factors which are at the disposal of a given enterprise. I shall not discuss here possibilities of abuse of such freedom, in the form of a simple increase in these prices, rather than a search for a profitability through a more realistic application of costs--this is a natural risk based on independent adaptive processes, under conditions of a "hungry" market and lack of competition. A more important matter is that positive processes may only take place within the framework formed by supply difficulties. This may happen, in some cases it will happen, that the production program will be decided not by economic rationalization but by the effectiveness of supply. It is still too early to determine the extent of the profits which we will gather in this respect due to the reform; however, I believe that thanks to the reform and the state of martial law, certain opportunities have presented themselves for utilizing our, so-called, shallow reserves.

This statement may astonish those readers who may perhaps recall that in the past I have, serveral times, opposed the modern theory, that the new system will automatically liberate large reserves. I have instead stressed that some of the, so-called reserves may demand if not larger investments, then at least modernization. Some reserves, on the scale of a single enterprise, will not be useful on the scale of national economy. The process of utilizing reserves must always be an extended one.

Why then am I willing to attach more importance to it today? It is simply this: under the conditions of reduction of production and a general loosening of the production apparatus there emerged new, shallow reserves whose exploitation, under the conditions of order and freedom of action by the enterprises, should not be so difficult.

Fight With Inflation

I'm looking with a more pessimistic eye on the activities pertaining to the matter of the new motivational system which, in its intentions, ties the earning to an effective functioning of the enterprise. Simply stated: no motivational system tied to an increase in earnings will be truly effective in face of inflation. On the other hand, a good market should be only the result of, and not the departing point for economic activity in the immediate future.

I'm being reinforced in this belief by the latest decisions pertaining to changes in retail prices for food articles, fuel and energy (I've no doubt that the decisions of the government will be in accordance with the draft of the Economic Committee of the Council of Ministers). Reform of these prices was supposed to be one of (albeit not the most important one though not entirely without significance) the elements of the deflation policy. In

the course of those unfinished discussions which were conducted on this subject, primarily with Prof Krasinski, it has been stated that--truthfully--the next project will not present the final solution. A simple comparison of the Economic Commission's draft with the draft of the Price Commission shows that a majority of compensations [rebates] have been increased while some price increases have been reduced. All the same, in a general overlook, the compensations give an increase over the burden of the consumers.

The sharp points, in the earliest proposals, have been at first converted to a form of redistribution of wealth between the rich and the not-so-rich, until in the end the whole operation ceased to be a viable element in the restoration of the equilibrium. Certainly, this does not detract from its importance, in a long range outlook, perhaps as an element of normalization of the disproportion of food prices to prices of industrial production items (we were not able to solve this problem for several decades) or for the establishment of proper proportions between individual food item prices (now, meat will cease to be cheaper than a serving of "Melba" ice cream from "Hortex"). It has to be strongly underlined that as the new anti-inflational element we will only see, or rather we shall observe in the course of the next three months, an increase in the prices of industrial goods resulting from the new production prices (in the course of three months because not all the enterprises would immediately increase all the prices). And so, as a consumer I rejoice that my compensation [rebate] will be higher than it would have been under the provisions of Prof Krasinski's draft, as an economist I'm saddened that the great pricing operation is resulting in such small anti-inflationary measures on such short range. This leads me to the obvious conclusion that we must still seek other means for restoring the market equilibrium, both from the supply side--which is more agreeable though more difficult--and from the demand side by application of means of taxation or (even compulsory) means to increase the degree of savings.

Are there Too Many Priorities?

Many words have been spoken on the subject of the negative impact of distribution [allocations] without which, unfortunately, we are unable to overcome our current production difficulties, particularly in imports. I shall only add that I have certain apprehension as far as it concerns the (so-called) operational programs (my fears are even greater since I am one of the co-authors of the concept of these programs). I'm not concerned so much about the fact that the number of such programs have grown, amounting to 14, as I am concerned about the possibility that some programs may grow far in excess of proper size. They were conceived as a measure to insure acute priorities of limited extent. The reason I'm not certain is that I'm unfamiliar with the programs which are currently in effect. I'm afraid, however, that when applied together the positions occupied by these programs may grow to such an extent that either their priorities will destroy the remainder of the supply or that they will become mutually destructive. Then it will become necessary to introduce "super-priorities" (we are familiar with this phenomenon from long years of bitter experiences--let us hope we can learn from our mistakes).

I'm omitting the matter of labor force relocations. I know too little about it and I've no inclination to trust theories, based on presumptions, that this process is not so difficult after all and that it cannot overcome resistance and other difficulties by application of a responsible policy. I'll try to come back to this once I've gathered some more intelligence about it. Similarly, although to a lesser degree, I'm not too certain about the subject of financial means and savings policies which are supposed to be complementing planned anti-inflationary activities, therefore, I will also omit it today. I mention the two above enumerated subjects only in order to enter them on the list of unresolved problems which are present on the threshold of the reform's introduction. This is a statement of fact and not necessarily an accusation, some of the problems are still in need of a thorough analysis, other problems are not so urgent and a hasty action may be just as damaging as procrastination.

In the article: "Ways and Dilemmas of Economic Reform" which I wrote in March 1981, I demanded from the economists that they differentiate more precisely between the moment of the reform's introduction and the moment in which the reform will achieve its full effect. I believe that this matter has been fully understood by the economists for some time now. The problem is much worse with public opinion which has a tendency to subscribe to the theorem: "All or nothing." It either expects, exaggeratedly, quick results or has no appreciation for those positive aspects of long-range results. In that article I've answered a question which I posed to myself, specifically, how much time will pass between the introduction and the full effectiveness of the reform? The answer was: "Variant of Hope" to be under three years, "Variant of Fear" to be over the three year mark. Taking into consideration the difficult circumstances and the complexity of the still unresolved tasks I'm pulling for the "Variant of Hope."

[illegible]
CSO: 2600/257

PRICE SITUATION UPDATED IN INTERVIEW

Warsaw ZYCIE WARSZAWY in Polish 16 Feb 82 pp 1, 2

[Interview with Minister Zdzislaw Krasinski, chairman, State Price Commission by Henryk Borucinski; date and location not given]

[Text] (W) The chairman of the State Price Commission PKC, Minister Zdzislaw Krasinski, speaks with a PAP representative about pricing problems.

[Answer] The timing of the price reform coincides with an unfavorable combination of circumstances, including the exhaustion of raw materials reserves in industry and finished products in trade. Last year, there was a very great decline in industrial production. However, the reform was a necessity. The PKC, already in the process of preparing the reform, became confronted with a delay because an avalanche of consignations forestalled us. We did detailed calculations and engaged in extensive consultations with various social groups. This took time.

On the other hand we knew that industrial production was declining, but that the reform could not wait because it was obvious that an increase in production at the old prices was impossible, while it is now at least probable. It is important that a change in the production structure take place rapidly, for the benefit of agriculture, above all. It is too early to evaluate the effects of the reform, but we at the commission are already positively shocked at the substantial stabilization of the food market.

[Question] Can you substantiate this statement?

[Answer] Well, we have access to interesting observations. There are regions in which people began to set up their household budgets differently from the outset, e.g., in Wielkopolska, where the greatest demand is noted for the least expensive varieties of cured pork products and meat. There are also regions, e.g., Warsaw, where the structure of consumption has not yet changed and people are continuing to look for the most expensive varieties of meat and cured pork products. Not everyone realizes that certain items have become available to them. Yesterday they could not buy them because they were not there and today they cannot buy them because they cannot afford them.

It is an unfortunate and painful operation, but we have not created illusions here for anyone. The results of a poll conducted by the Center for Public Opinion indicate that at present every third citizen feels the lack of money more than the lack of goods. The poll was conducted during the first days of the month, when salaries had not yet been handed out. This attests to the fact that people are already calculating their expenses differently.

[Question] Minister, man does not live by bread alone. He needs shoes, clothing and household equipment. It appears that the new prices for manufactured goods "eat up" compensation.

[Answer] No one buys suits every day (nor have they increased in price as much as was indicated initially) or household equipment. Thus, these products do not "eat up" compensation. Most families already have such equipment. I should like to bring up a basic point, that in the field of manufactured products, the laws of the market should be most readily apparent. A person must buy bread, but one can wait to buy a radio, a washing machine or even clothing until the producer eases prices. Now producers cannot afford to wait because they will live from what they sell. Lately one hears that producers are reducing their newly established prices as a result of various actions. This is the pressure of the market. A force of 20 million supervisors in the form of thrifty consumers is a powerful force. The new prices for manufactured goods hit families just starting out the hardest, i.e., newly married couples.

[Question] One could say that since they do not have apartments, why do they need equipment?

[Answer] That is an attempt at black humor. The government sees and appreciates the housing problem. As you know, despite a considerable increase in construction costs, attempts are being made to keep housing prices at an unchanged level. It is a positive phenomenon that newlyweds are borrowing trouble, for like our entire society, they must learn to live with pencil in hand.

[Question] Rumors are circulating that there are new prices for alcohol, cigarettes and other products.

[Answer] There will be no price increases for alcohol and cigarettes. In proportion to the average wage, the current prices for alcohol and cigarettes are the highest of the entire 15-year period. This is not only draining, but has a social effect as well. However, no State on earth will set prices at a level which will cause a decline in budgetary revenues instead of an increase. Moreover, as regards vodka the current price has made it profitable to take the risk of producing alcohol illegally.

[Question] What about beer and coca-cola?

[Answer] These products are priced at free market prices. I know that breweries must now pay considerably more for barley, and that they intend to raise the price of beer by several zlotys per bottle. I do not know what will happen to the price of coca-cola.

[Question] Since you at the PKC do not anticipate any price changes, you will be out of work.

[Answer] That is no threat, but I do admit that we counted on a "breather" after the price reform was introduced. Meanwhile, a period which is no less difficult for us has now begun. We are analyzing the signs of the movement of free and agreed-upon prices and we are conducting a struggle against the tacit collusion of producers who establish prices according to the production costs of the most expensive manufacturers. With this type of tacit agreement we will not mobilize producers to look for ways to reduce costs, which is the goal of the reform.

Fortunately, we are able to do battle with industry because we have the proper legal authorization. The situation is worse with trade. With SPOLEM, we note a trend toward the monopolistic control of the market. I would be happy to see the development of factory and state-farm stores and the creation of organizations in trade that would compete with SPOLEM.

Voivodship governors can do much here by transferring stores to labor and trade cooperatives, or to private hands. Under conditions of the economic reform, the policy of uniform prices to which we have become accustomed is to be considered detrimental to, and at odds with, the spirit of reform.

8536
CSO: 2600/362

RECENT AGRICULTURAL DATA PROVIDED

Updated Harvest Results

Warsaw RZECZPOSPOLITA in Polish 19 Jan 82 p 4

[Text] Crop production results in 1981. Harvests. Trends. Causes.

According to the State Inspectorate of Agricultural Production's estimate, harvests of the chief agricultural crops in 1981 look like this:

/total grain crops/--19.7 million tons, i.e., 0.8 million tons less (by 3.8 percent) than NPSG's [cannot locate] estimates and 1.4 million tons more (by 7.6 percent) than last year's harvests; in relation to average harvests for the years from 1971 to 1980, last year's grain harvests were down by 2.4 percent;

/potato harvests/--42.6 million tons, i.e., 3 million tons more (by 7.5 percent) than NPSG's estimates and 16.2 million tons more (by 61.2 percent) than the very low harvests obtained in 1980; in comparison with average harvests for the years from 1971 to 1980, last year we had potato harvests that were 5.3 percent lower than average.

/sugar beet harvest/--15.8 million tons, i.e., 0.8 million tons more (by 5.3 percent) than NPSG's estimates and 5.7 million tons more((by 55.8 percent) than last year's harvests; these were the highest beet harvests in the history of Poland's sugar industry;

/oleaginous crop harvests/--497,000 tons, i.e., 33,000 tons less (by 6.2 percent) than NPSG's estimates and 86,000 tons less (by 14.8 percent) than last year's harvests; last year's oleaginous crop harvests were the lowest in 8 years (except for 1979);

/harvest from meadows (adding hay harvests)/--14.7 million tons, i.e., 2.3 million tons more (by 19.1 percent) than last year's harvests;

/vegetable harvests/--5,087,200 tons, i.e., 1,240,100 tons more (by 32.2 percent) than in 1980 and 940,200 tons more (by 21.6 percent) than the average harvest for the years from 1976 to 1980;

/fruit tree harvests/--1,006,400 tons, i.e., 208,200 tons less (by 17.1 percent) than harvests attained in 1980 and 357,000 tons less (by 26.2 percent) than the average harvest for the years from 1976 to 1980;

/berry fruit harvests/--380,100 tons, i.e., 31,800 tons more (by 9.1 percent) than 1980 and 26,400 tons more (by 7.5 percent) than the average annual harvest for the years from 1976 to 1980.

Unfavorable initial production conditions affected the level of harvests of many agricultural crops--especially the following conditions; a significant amount of nutritive elements washed out of the soil (as a result of torrential rains and floods); belated and, in many cases, unfinished field work.

In comparison with harvests in 1981, procurement of grain and potatoes to date is relatively low. About 1.7 million tons of grain (barely 38 percent of the plan) and 3.5 million tons of potatoes (64 to 70 percent of the plan) have been procured. Due to small procurement, agricultural crop stocks available to the State are considerably less than last year's, which has a negative effect, first of all, on industrial production of grain products and concentrated fodder. In the next several months there is a threat to supplying the populace with flour products.

Taking into consideration the level of grain and potato harvests in 1981, the course of procurement of these agricultural crops, and the condition and productivity of the number of farm animals, as well as the level of fodder crops harvests (which can be substituted for grain)--the State Inspectorate of Agricultural Production estimates that farms have certain grain and potato reserves which should find their way to procurement centers. The State's procurement of these reserves requires conducting intensified but prudent operations, so as not to cause a depletion in the fodder base on farms engaged in animal production.

January Livestock Inventory

Warsaw RZECZPOSPOLITA in Polish 20 Jan 82 p 1

[Text] A little optimism from January's inventory. An increase of 600,00 head of cattle, including 126,000 cows. An increase in the number of hogs in 45 voivodships. An abundance of fodder for replenishing herds.

As the Central Office of Statistics has informed us--preliminary results for the quarterly inventory of farm animals on non-socialized farms of the economy indicate an increase in the number of cattle by 600,000 head (by 7.4 percent), including 126,000 more cows (by 2.6 percent). In comparison with a year ago, there has been an increase in the number of cattle in all voivodships, while the number of cows continues to trend at a lower level since January of last year in the voivodships of Katowice, Rzeszow, Krakow, Nowosad, Tarnobrzesk, Krosno, Tarnow and Bielsk.

The number of swine has increased by 1.3 million head (9.9 percent), including an increase of over 600,000 head of piglets and porkers and 22,000 head of

breeding sows. The number of swine has increased in 45 voivodships, the largest increases (above 15 percent) were in the voivodships of Pila-Lomza, Sieradz, Bydgoszcz, Piotrkow, Wloclawek, Konin, Warsaw, Rzeszow, Skierniewice, Kielce, Jelenia Gora, Radom, Krosno and Lodz.

A certain drop in the number of swine (ranging from 6.4 to 0.3 percent) has been recorded in the voivodships of Szczcin, Gdansk and Zamosc.

The inventory points to growth trends in the breeding of farm animals, though --as GUS sees it--holding back slaughter animals on farms may have had some effect on the increase in the number of head, which has been confirmed by their weak showing in procurement in the fourth quarter of last year and an increase in the average weight per head delivered to procurement centers.

An indisputable favorable phenomenon, however, is the increase in the number of cows and sows, which, in connection with the information on the intensity of their cover, presages the replenishing of herds--obviously under the condition of accumulating sufficient fodder stocks.

However, changes in the number of animals on socialized farms are still not known, that is to say, one has to wait until the end of January when GUS will have gathered complete data on the number of animals in all of agriculture before final conclusions can be drawn on the prospects for animal production.

Sugar Production

Warsaw RZECZPOSPOLITA in Polish 20 Jan 82 p 4

[Text] Balance of sugar. Not so sweet. One million seven hundred thousand tons of sugar in this year's campaign. A lack of possibilities for increasing present allotments.

This year's sugar campaign will probably end on 20 January. Predicted sugar production may amount to over 1.7 million tons. This is good, but the incomplete result of the sugar campaign presently coming to an end has raised unfounded hopes for increasing ration card allotments. Meanwhile, this year's harvests are hardly enough to cover the present 1.5-kilogram (for some groups of the populace--2-kilogram) monthly ration. Why is this so?

Well, the 1981 sugar campaign harvests were not bad, to be sure, coming as they did after a truly disastrous campaign in 1980. Then we produced barely 1,043,000 tons of sugar and until the beginning of the next campaign (beginning in September) we succeeded in consuming not only stocks for trading but the State's reserves as well.

To supply the market for the month of September 1981 alone, it was necessary to take 82,000 tons of sugar from the present campaign, whereas in normal years in September, sugar from the previous campaign is consumed. It was also necessary to restore guaranteeing continuities in supplying stocks for trading at the amount of 62,000 tons. So already "at the start" the result of this year's campaign had to be reduced by about 200,000 tons.

Then in November a decision was taken that one may also purchase sugar for unused monthly ration cards (again, a loss of 25,000 tons), and--on the basis of good forecasts for the final result of the campaign--a 0.5-kilogram increase of ration card allotments for December absorbed another 12,500 tons of sugar.

Moreover, in the fourth quarter of last year, 290,000 tons of sugar have been directed to trade, 134,900 tons to processing, 30,000 tons to sugar beet planters, 16,000 tons to apiarists; food harvest agencies have taken 4,000 tons.

Likewise, sugar has already been distributed for the third quarter of this year. Seven hundred and seventy three thousand tons are directed to trade 558,000 tons of which for covering supply cards; collective consumers take 9,000 tons; 144,00 tons of sugar goes for non-market dupply (restaurants and tradesmen); 5,000 tons goes to BALTONA and PEWEX; and apiarists will take 30,000 tons.

This year 298,000 tons of sugar are designated for production purposes. So much of this production goes to all industries taken as a whole, that is to say, for the prouction of sweets, jams, marmalades, wine, soft drinks, and the like.

Sugar export is not large and it is covered by sugar imports from Cuba, with whom we have had relations for many years. For the time being, a decision has been taken on the export of 20,000 tons of sugar, which we are it last exchanging for cooking oil.

With 1.7 million tons of sugar, the monthly allotment continues to be 1.5-kilograms. Dieticians maintain that these rations are quite adequate. And it could not have turned out any better that such a large allotment has been maintained and greater quantities of sugar have been directed to the food industry. After all it is sugar we eat, so much of it in a more varied form. Only specialists can be led away from the "liquefaction" of this product.

9866
CSO: 2600/333

DEEP SEA FISHING GOALS DISCUSSED AT CONFERENCE

Warsaw RZECZPOSPOLITA in Polish 22 Jan 82 p 3

[Article by (KP)]

[Text] Yesterday in the Office of the Maritime Economy there was a meeting of the interministerial group for deep-sea fishing. The condition of the fleet operating in distant sea areas, its requirements in the years 1982-1985 and prognoses to the year 1990 were discussed.

The current situation on the food market necessitates that fishing supply a minimum of 7 kg of fish per inhabitant. This will be possible when the annual catch of the fleet reaches 0.5 million tons of fish per year. This task can be accomplished provided that the fishing fleet is modernized and productive fishing grounds are assured. As it happens now, fishing boats work in sea areas where the costs of catches are double the average costs.

Last year, 20 old fishing boats, unsuited to today's needs, were withdrawn from service. These are B-15, B-20 and B-23 vessels, on which the costs of catching a ton of fish are three-fold the costs on other vessels. By 1985, an additional 40 worn out fishing boats will be dropped from the deep-sea fishing fleet. That is more than one-third of the entire number of units working beyond the Baltic Sea basin.

There was lengthy discussion of the problems of financing the maritime economy.

A basic concern is considering the specific nature of fishing enterprises, by establishing a system of utilizing foreign-exchange income. If they operated on the same basis as planned for land enterprises, they would have to sell their entire catch abroad in order to cover their foreign-exchange costs. Representatives of deep-sea fishing enterprises are in favor of a system of accounting out of the State budget which would enable them to finance their foreign-exchange outlays through the sale of 40 percent of their catch, with 60 percent being designated for the domestic market.

A system of prices and subsidies was also considered. The complete elimination of subsidies would have to bring an increase in retail fish prices. For example, 1 kg of cod fillet would cost approximately 230 zlotys. By comparison

with current prices, or even with proposed prices after an increase is put into effect, this is an astronomical sum. It was pointed out, however, that despite such drastic increases, these prices will still be lower than meat prices as outlined in the well-known State Price Commission brochure. Of course, all drafts creating profitable deep-sea fish prices for fishermen can be considered at some time in the future, and only in conjunction with proposals of the full compensation of expense increases from family budgets.

8536
CSO: 2600/344

COAL SUPPLY SHORTAGE ASSESSED

Warsaw ZYCIE GOSPODARCZE in Polish No 49, 6 Dec 81 p 2

[Article by Krzysztof Fronczak]

[Text] Since August of last year the coal problem has been a subject of very serious concern. Great concern is being expressed over reports on coal production, which is a far cry from what it was in the fat years gone by. Coal is commonly regarded as a factor which has a critical impact on the performance of our entire economy. All economic analysis scenarios, regardless of whether we are talking about the hopeful or fearful versions of these scenarios, in effect portray coal as the prime mover which is finally supposed to set the economic stabilization process into motion and later on gradually extricate us from our economic crisis.

Nobody denies the importance of coal for the nation as a whole. It has always been enormously important. However, the debate goes on and there are differing opinions as to whether the problem is basically attributable to the fact that there has been a sharp falloff in coal production or also whether it might not even be possible to meet all of our needs with what the miners are producing right now on the condition that efforts are made to provide for the better distribution of coal output and its more efficient, conservation-oriented consumption. But the truth of the matter is that there is no way to improve the exploitation of this Silesian motherlode overnight. Since we are talking about this and not some other industry, an industry which is endowed with certain technologies that are not the most cost-effective, there is no way we can look forward to such an outcome. The prospects for obtaining relief in this way are rather remote, a fact which to be sure cannot be cited by way of making excuses for the lack of fresh ideas on how to deal with this problem and downgrading efforts aimed in this direction. But this takes time. So, the actions taken by the government to step up coal production, actions which are a source of great controversy--and not just among miners--are hardly surprising. Without going into the merits of this approach, it can still be pointed out that the problem has been oversimplified by viewing reduced mine working hours as the principal reason for the slowdown in production, while for years now it has been "traditional" to point out that a very great deal remains to be done in the area of work organization, transportation system servicing, maintaining the serviceability of mining machinery, and so on. The debate goes on and it will continue

to do so indefinitely, but in the meantime the most important thing as far as the economy is concerned are the realities of the coal situation in the here and now.

In 1979 201.9 million tons of coal were mined, compared to 196.5 million tons last year. This year's plan, which touched off a big furor when it first came out, officially still calls for a production target of 168 million tons, even though now no one labors under the slightest illusion that this target can be met inasmuch as barely 135.8 million tons were mined during the first 10 months of this year.

This year's total output will not amount to more than 162 million tons (i.e., 20 percent less than was produced in 1979). During these past 10 months 30.3 million tons less coal was mined than during the same period last year (a drop of 18.2 percent). As a result, this means that coal deliveries for industrial consumers will decline by 13.9 million tons (12.6 percent), for private consumers--by 2.2 million tons (8.2 percent), and for export sales--by 14.8 million tons (51 percent), which includes an 11.2 million ton falloff (61 percent) in coal export sales to payments zone II [capitalist countries]. The final 2 months of this year surely are not going to witness any major turnaround in these statistics, since this is simply no longer possible.

Let's take a look at the figures given in the table below that portray the hard coal supply situation. Who has been hit hardest by the coal crisis? [Table on following page]

The following qualification should be made right away with respect to this table. Namely, we know by now that the 1981 socioeconomic plan is not going to be fulfilled. And so if the plan itself projected coal deliveries for individual categories of consumers that are down by approximately 10 percent over a year ago, then the impact of this underfulfilled plan is going to be all the more painful. Considering that we are already three quarters into 1981, the hardest hit consumers are the chemical industry, light industry, the timber and wood products industry, the Ministry of Agriculture and the Food Industry (even though this was the only sector for which the plan envisioned increased deliveries in relation to last year), and the construction and transportation industries.

It is hard to estimate what the effects of reduced coal supplies will be. For example, it is impossible to say by how much the output of textiles or plastics in plants under the jurisdiction of the Ministry of the Chemical Industry and Light Industries will go down for this reason, since there are many other factors that could be blamed for production cutbacks, e.g., shortages of imported raw materials and machinery spare parts, plant shutdowns caused by power outages, and so on--to mention a few. In order to define the scope of this problem in somewhat clearer terms I would say that a 1-million ton coal shortage is tantamount to a loss in aggregate industrial output on the order of Zl 25 billion, while shortages of additional millions of tons will multiply the magnitude of these losses in almost geometric progression and sever the already fragile bonds that exist between producers. One ton of coal generates approximately 2 MWh of electricity and yields up 0.6 to 0.7 tons of coke. One ton of coal makes it possible to manufacture 4-5 tons of rolled products, 4 tons of cement, and 400 kg of sugar.

The Hard Coal Balance Sheet

Category	1980	1981 National Socio-economic Plan	1981/1980 X 100%	Progress toward fulfillment of the National Socioeconomic Plan by end of 3d quarter 1981 in percent
	in thousands of tons			
Sources, including:	197,420	170,700	86.4	72.7
Extraction	193,121	168,000	88.2	72.4
Briquette production	1,567	1,600	102.1	72.4
Imports	1,012	1,100	108.6	73.6
Supplier reserve stocks	1,720	1,000	58.1	36.2
Uses, including:	197,420	170,700	86.4	72.7
National supplies--deliveries	167,065	153,530	91.9	72.3
Production-operating uses	134,179	123,830	92.2	71.7
Ministry of Mining and the Power Industry	66,863	61,630	92.1	73.4
Ministry of Metallurgy and the Engineering Industry	33,312	30,850	92.6	73.3
Ministry of the Chemical Industry and Light Industries	11,206	10,360	92.4	68.0
Ministry of Agriculture and the Food Industry	5,724	5,800	101.3	67.7
Ministry of Forestry and the Wood Products Industry	3,158	3,000	94.9	66.0
Ministry of Construction and the Building Materials Industry	7,083	6,490	91.6	65.4
Ministry of Transportation	3,684	2,900	78.7	67.0
Miscellaneous ministries	3,149	2,800	88.9	65.1
Residential-municipal uses, including:	32,886	29,700	90.3	74.8
Market supplies	24,903	22,850	91.7	73.1
Supplies for state farm workers	959	850	88.6	67.5
Workers salaries paid in kind	5,020	4,800	95.6	75.1
Group consumers	992	900	90.7	75.8
Direct mine sales	1,012	300	29.6	224.0
Exports	31,048	17,170	55.3	75.7

Source: "Basic Fuels and Electric Power Balance Sheets" prepared by the Materials Management Section of the Productive Assets and Finance Department, Main Office of Statistics.

Finally, for 1 ton of coal sold on western markets we earn--on the average--
[illegible] dollars.

Coal stocks are dwindling. They are down by 15 percent over a year ago, and even back then they were considered to be undersized. Three quarters into the year the chemical industry and light industries have not much more than half of the coal stocks envisioned by the plan. Plants under the jurisdiction of the Ministry of Metallurgy and the Engineering Industry have not quite 70 percent of their plan-mandated stocks. Coal stocks in the retail trade sector have shrunk to the point where they are twice as small as they were last year. One out of every three coal depots does not have any coal at all. Let us hope that we have a mild winter!

Declining export sales are a source of special concern. The comparison between the 41.4 million tons of coal that was sold abroad in 1979 and the mere 17 million tons which we want to sell this year speaks for itself.

And it is after all true that the less we earn from export sales the less we are able to buy other industrial raw materials and consumer goods and the greater the strain on our balance of payments. There is probably no need to go on spelling out what all of this means.

The coal shortage represents a national bottleneck. As of right now this problem overshadows the problem of imports. It cannot be ruled out that by the start of the new year this situation might be reversed, that is, imports might turn out to be the most formidable barrier standing in the way of industrial growth. One thing is certain, both of these factors are closely related and it is indeed hard to overrate the importance of the role coal has to play in overcoming this obstacle.

Economic survival and putting a stop to the spreading economic paralysis depend on coal. Coal is essential in order to bring things back to normal in industry and in order to boost agricultural production. Everyone knows by now that there will not be as much coal around as one would like. The coal supply balance sheet which we have published here is an illustration of this bitter truth which, unfortunately, is something we are going to have to live with, in addition to realizing that, notwithstanding the hard work of the coal mining fraternity, the intentions of the government, emergency organizational measures, and the hiring of more miners, the rapid attainment of a level of output on the order of 200 million tons, which would insure a relative abundance of this fuel, is virtually impossible. These figures attest to the passing of the era of cheap energy resources which used to be managed in such a reckless fashion without paying any heed to costs. Those days are gone forever.

11813
CSO: 2600/211

'STABILIZATION PROGRAM' HELD NONEXISTENT

Belgrade DUGA in Serbo-Croatian No 206, 16 Jan 82 pp 20-21

[Article by Slaven Letica: "Open Letter to the Federal Government, Respectfully...."]

[Text] The Federal Executive Council, more precisely its chairman, ended calendar year 1981 with an extraordinary and bizarre public recognition. The TV magazine STUDIJO in Zagreb awarded Veselin Djuranovic three stars for the interview broadcast on the program "Wednesday's Choice" (TV Belgrade, 23 December 1981). The reasons the editors gave in making this award are worth quoting:

"... For political, professional and TV effectiveness of a presentation which demonstrated that viewers can be familiarized with the economic difficulties of the functioning of the Federation and the federal government with calm, sound argument and political wisdom. In the flood of presentations and statements by scholars and public figures overflowing with nervousness and intolerance, Djuranovic issued pleas for democracy, tolerance and reason, and surely he received the applause of all our viewers."

At the very least the award and the reasons given can please Djuranovic's vanity. The manner in which the substantiation of the award was written reveals, that is, the obvious intention on the part of the editors to emphasize almost provocatively how exceptional Djuranovic's interview was in all respects(!): different and better than the TV "presentations" of his fellow politicians. As a viewer and listener I agree with STUDIJO's editors. For 1.5 hours of the television interview Djuranovic did indeed come across convincingly and even brilliantly. He left the impression of a man whom one could take "at his word." He responded to the 30 or so questions calmly, logically and comprehensively, without the help of "material" or advisers. He took even the most provocative questions quite naturally, with the calm composure of a man who has decided in advance to offer his own sincerity as a pledge to the public's confidence. That is why he listened to the questions without that typical awkwardness which our public figures usually await questions loaded with criticism and questions which are provocative. Finally, with a refined sense for allowing every opposing viewpoint, he used logic and argument in defending the positions of the Federal Executive Council and his own personal positions: concerning the need to reach agreement in the

Federation, concerning economic policy, etc. Nor was the latter the least important: he spoke understandably, with no intention to conceal possible ignorance or uncertainty behind an overpowering political slogan or bureaucratic formula.

One Criticism

With this congenial "excess" on the part of a public periodical (and it will become clear why I use the word "excess") to signify a change in the general attitude of the public toward the activity of the SIV [Federal Executive Council], this perhaps should even disturb us. That is, the present federal government, not without pride, was until quite recently able to brag of being the most criticized federal government. Often uncritically praised in the international monetary and financial community, it has experienced a great deal of criticism from the domestic public: business circles, specialists and the parliament. Those criticisms of SIV: of the organization of its work, its behavior and its economic policy, were very often extremely radical but--and this is a compliment to the government--they were never taken (by SIV), at least not publicly, with visible restrictiveness and intolerance.

I would like to mention here one piece of criticism which because of the author's name and the post he once held perhaps sketches out most illustratively the nature of the public's attitude toward SIV.

In an interview published in START on 10 December 1980 Mitja Ribicic, one of the former federal prime ministers, criticized Djuranovic's government without any sort of "collegial" restraint:

"... in the recent period we have not had a sufficiently firm or strong federal government, but rather it has behaved as though it could not reach agreement itself; the republics exert much more influence on it than would be natural in the present situation. SIV ought to be quarreling with almost every republic." In answer to the question "What was the case with you when you were prime minister?" Ribicic responded: "Almost like that. I was quarreling with the Slovenians over highways, with Bosnia over Bosanska Krajina, with Vojvodina over the prices of farm products, with Serbia over tax benefits granted to Crvena Zastava, and with the Croats over the funds not covered by the budget."

I have already made one previous public attempt (in a newspaper column) to explain why Ribicic's criticism does not stand up from a methodological standpoint of view. In that criticism in which he offers his own administration as a general model of "government" (which the present SIV should accept) the critic has neglected at least two fundamental facts.

First: he (Ribicic) "governed" in the period of the first world and Yugoslav energy crisis, when the payments deficit was relatively low or at least not so large as to determine all other economic policy; in a period when the cost of capital was low and when construction of some 30,000 investment projects was pointed to as a symbol of the great economic power of the state (and not, as it is today, as an indicator of the seriousness of the economic crisis).

Second: he governed in the period of the reform of the Federation, when SIV had considerably greater room in which to maneuver in economic policy, and when it could "quarrel" with the republics (since it did not depend on the complicated procedure of their reaching agreement).

A Short-Winded Policy

Hoping that a theoretical assessment of SIV's activity is nevertheless more important to both SIV itself and to my reader than a television assessment, I will attempt in this comment to sketch in rough outline the basic features of "federal" economic policy in 1981. First of all, I think that the economic policy of SIV in 1981 cannot be measured and evaluated by the usual (current) macroeconomic indicators: growth rates, size of the payments deficit or the level of government debt. It will be possible to use these quantitative indicators as measures of the success or failure of current economic policy only when and if it returns to the framework of the legitimate constitutional principles concerning "free operation of market and economic laws." Unfortunately, only then--when the effect of the administrative and coercive measures of economic policy cease to be operated in foreign trade policy, foreign exchange policy, price policy, development policy, investment policy, etc., it will become definitively clear whether current economic policy in 1980 and 1981 was a policy of "firefighting" or a necessary policy of the "transitional period" toward the programmed policy of long-term stable development. In view of those circumstances SIV's economic policy in 1981 should be evaluated by assessing the basic and fundamental tendencies and conceptions which stand at the base of practical policy.

Quite consistently with my previous position I will attempt--admittedly more in a common sensical rather than theoretical and logical analysis--to distinguish those elements in 1981 federal economic policy which are constructive in their tendency from those which are adverse in tendency.

The two basic features of that policy (obvious even to the informed layman). First: in 1981 SIV has given absolute priority to current economic policy (as compared to development policy and policy governing the economic system). Second: within the framework of current economic policy priority has been given to foreign trade and foreign exchange policy, and in part to monetary and credit policy. This conception of SIV's economic policy is logically derived from the conception of the (priority) goals of development. That is, the strategy of economic policy has been adapted primarily, even exclusively, to the need to achieve ONLY ONE DEVELOPMENT GOAL: achievement of the planned payments deficit.

The second most important goal (with a disproportionately lower weight) in current economic policy was "reducing all forms of expenditure." This goal was based on the belief that the fundamental cause of the current economic crisis is "exaggerated spending" (investment spending in particular). I do not wish to comment here on how right or wrong that belief is, since I could get into an argument with our rhetorically aggressive MONETARISTS! I must nevertheless make this remark: I always saw it to be a greater evil for us to build the wrong projects at a high price than to build a great many projects!

SIV has mainly been trying to "reduce expenditure" through a somewhat more restrictive monetary and credit policy and through an attempt at administrative control of investment projects (i.e., halting those which are begun). This is a very oversimplified sketch of the essence of the conception of SIV's economic policy in 1981 ("odd--even," the customs barrier of 200 dinars which is politically offensive and offensive to the public, and similar ministerial and parliamentary excesses will not be mentioned here because they pertain to the workings of the so-called "law of triviality" which is, of course, inherent in our administration).

As at the end of 1980 I will present a basic assessment of the conception which has been sketched out: perhaps it cannot be defended by any sort of arguments out of economic theory, but it can be defended by irrefutable arguments in Realpolitik! That is, the question should be defined approximately like this: What could the federal government objectively do in a situation when the precise facts (and not just suspicions) show that the country's payments deficit objectively ought to be at least $4-5 billion (if the import of capital, industrial goods and consumer goods were moderately liberalized and if exports were not "stimulated" administratively) and when the opportunities afforded by the balance of payments allow a maximum deficit of $2 billion? The answer in terms of pragmatic policy runs like this: (1) the government can submit its resignation or (2) the government can enforce a harsh and linear policy of administrative regulation of all flows of foreign exchange.

There is, of course, nothing in theory that could justify such a policy except--its inevitability. All the business people and specialists and politicians who assert that such a policy is undemocratically founded (it never was submitted to a plebiscite of our specialists and people in the economy), that it is destructive to development, that it engenders speculative and middleman behavior and stands in the way of productive and planned behavior, and so on, and so on, THEY ARE ALL RIGHT. However, the fact that they are all right can hardly in terms of formal logic, much less in terms of Realpolitik, call this (unsympathetic) policy of SIV into question.

There is only one circumstance which possibly could be called into question. The possible circumstance that alongside this kind of current economic policy SIV and the republic-provincial "governments" are not preparing DRAFTS OF STABILIZATION POLICY which would be more constructive and would cover a more lengthy period. That is, a policy of restriction, a policy of coercing exports, a policy of administrative handling of income, prices and business conditions is a short-winded policy. This is a policy of improvisation, necessary in a situation when the "stabilization program" simply does not exist.

And here, as far as that "program" is concerned, I am afraid there is potentially still another and even more fundamental error.

Over the long run SIV cannot on its own either draft or carry out a "stabilization program." The federal government and the so-called "Krajger commission" can and must draft a program of (possible) reforms of the economic system and of economic policy. However, since the true solutions and the real problems in economic development lie in the sphere of work, production and

microeconomic structures, the federal "stabilization programs" should take more pains at optimalizing the prerequisites of the processes of stabilization embodied in the system than to concern itself with practical "formulas" for the policy and practice of stabilization.

Conclusion

Summing up, I conclude as follows: following 1980, in 1981 SIV showed an almost hard-headed consistency and obstinacy in carrying out a single concept of economic policy, unfortunately one that holds absolutely no promise and is destructive in the long run. Thanks to that consistency SIV has created a breathing space for the calmer work of the "Krajger commission," which has undertaken the task of drafting a long-term economic stabilization program.

Should that program be drafted soon and if it is effective (i.e., if it has general power in motivating and mobilizing optimum economic behavior on the part of all economic entities: individuals, workers, enterprises, SIZ's [self-managing community of interest], and so on, and so on), in a few years SIV's policy in the period 1979-1981 will have to be given extremely good marks in both theory and Realpolitik. If that does not happen, and that is also likely, that policy will have to be given radically poor marks.

And at the very end something which need not be a complete digression. In the resolution for this year SIV extended the list of the basic goals of development. Along with "reducing the deficit" and "reducing spending" it emphasized a third strategic goal--"reducing inflation" (from last year's rate exceeding 40 percent to "only" 15 percent). Many theoreticians have judged this goal to be altogether unrealizable. Personally, because of all the "behavioral" characteristics of Djuranovic's government we have described, I am willing to take a bet that that goal will be achieved. I certainly hope that the reader has himself already been able to conclude that if he has carefully read the article so far: and that reduction of the rate of inflation will be paid for at the price of administrative price control, and precisely for that reason in and of itself it will neither be good nor bad. But it will cheer the pensioners and all business people who have managed to win a favorable position for themselves in the present relations of relative prices.

7045
CSO: 2800/275

FOREIGN TRADE REGIONAL BREAKDOWN, 1981

Belgrade PRIVREDNI PREGLED in Serbo-Croatian 23 Feb 82 p 3

[Article by M. Urosevic: "Progress Is Obvious in Reducing the Deficit"]

[Text] The final figures on foreign trade and the 1981 trade deficit which the Federal Bureau of Statistics published a few days ago indicate appreciably more favorable relations and results than a year ago, and this has helped to halt the negative trends in trade with the world that have persisted for several years.

This conclusion follows, of course, from the figures which measured exports and imports, but without elements such as the consequences of restrictions on imports taken when it was seen, after the first half of the year, that exports were not growing, that imports were growing, and that the coverage of imports by exports did not exceed about 55 percent. Much has been said about those consequences, it is likely that they have affected certain organizations of associated labor and even entire groupings, just as in previous years when it became inevitable to resort to restrictions. It should therefore be understood that the only way to fight such measures is to consistently respect the proportions that have been agreed on in the foreign trade sector of the economy.

Appreciable Improvement

It has become almost the rule that business people in the chambers and general associations, as if in accordance to some rule, say at the beginning of every year that the proportions set down in the planning documents cannot be achieved. That is also the way it was at the beginning of last year when the plan was published which called for the trade deficit to be reduced by approximately one-fifth. With all the qualifications that have already been stated, it is now clear: the results show that the forecasts were realistic.

The growth of exports to 298.3 billion dinars, as against 245 billion in 1980, that is, by 22 percent, and the growth of imports by only 5 percent, from 411.3 billion dinars in 1980 to 433 billion last year, brought about a reduction of the deficit by slightly less than one-fifth--from 166.2 billion dinars to 131.8 billion, and that is a most worthwhile result. Expressed in dollars, according to the order of the Federal Executive Council setting the rate of exchange of foreign currencies on the basis of which the value of the dollar is 27.30 dinars, earnings from exports amounted to $10.9 billion, but $15.7 billion were

paid for imports, so the deficit was $4.828 billion, which is $1.259 billion less than a year previously.

Trade Balance in 1981

Sociopolitical Community	Total, in millions of dinars			Share in Total, %		
	Exports	Imports	Deficit	Exports	Imports	Deficit
SFRY--total	298,360	430,166	131,806	100.0	100.0	100.0
Bosnia-Hercegovina	42,388	57,118	14,730	14.2	13.3	11.2
Montenegro	4,234	10,434	6,200	1.4	2.4	4.7
Croatia	65,967	108,507	42,540	22.2	25.2	32.3
Macedonia	14,907	25,622	10,715	5.0	6.0	8.1
Slovenia	61,604	72,496	10,892	20.6	16.9	8.3
Serbia proper	77,714	93,777	16,063	26.1	21.8	12.2
Kosovo	5,771	12,137	6,366	1.9	2.8	4.8
Vojvodina	23,801	36,119	12,318	8.0	8.4	9.3
The Federation	1,974	13,956	11,982	0.7	3.2	9.1
Total, in dollars	10,929	15,757	4,828	--	--	--
Convertible area						
Dinars	175,843	320,672	144,829	--	--	--
Dollars	6,441	11,746	5,395	--	--	--

However, trade is more unfavorable with the convertible currency area, where the deficit reached $5.3 billion, so that the surplus in trade with countries of the bilateral payments area, amounting to about 13 billion dinars, or $476 million, only partly mitigated the negative results.

Differing Contribution

As in previous years, the share of the various republics and provinces in the results achieved varied greatly, as can be seen in specific terms from the figures given in the table.

Three-Year Comparison of the Deficit in World Trade

Sociopolitical Community	Deficit, in millions of dinars			Coverage of Imports by Exports, %		
	1979	1980	1981	1979	1980	1981
SFRY--total	116,267	166,171	131,806	50.5	59.6	69.4
Bosnia-Hercegovina	9,435	17,238	14,730	65.1	66.4	74.2
Montenegro	3,066	3,901	6,200	38.5	49.6	40.6
Croatia	34,703	52,050	42,540	46.1	52.1	60.8
Macedonia	8,098	10,071	10,715	43.2	53.2	58.2
Slovenia	14,895	17,103	10,892	60.7	74.6	85.0
Serbia proper	17,190	16,633	16,063	62.7	78.8	82.9
Kosovo	3,031	4,782	6,366	47.5	54.3	47.5
Vojvodina	11,884	25,059	12,318	41.7	44.8	65.9
The Federation	13,965	19,334	11,982	--	5.4	14.1

The share of the various republics and provinces in the total deficit, expressed in absolute figures, is easy to see. Montenegro, Macedonia and Kosovo showed an increase over 1980, while the other republics and Vojvodina by and large, some more and some less, have reduced their deficit, and this also contributed to the more favorable overall results.

Viewed in terms of the coverage of imports by exports, which is an exceedingly important indicator of success or failure in foreign trade, the trends at the national level have been increasingly favorable over these 3 years. In 1979 the coverage of imports by exports only slightly exceeded one-half, the next year it climbed to 59.6 percent, and in 1981 it reached 69.4 percent. The coverage of imports by exports in trade with the convertible currency area, though at an appreciably lower level, has been improving during those 3 years: in 1979 it was very modest at 41.3 percent, and in the next year it climbed to 49.8 percent, and last year it climbed another 5 points to 54.8 percent.

One is struck by the fact that last year only Slovenia with an enviable 85 percent, Serbia proper with 82.9 percent and Bosnia-Hercegovina with 74.2 percent had a higher coverage of imports by exports than the Yugoslav average, while the other republics and both provinces were on that other, negative side of the average.

One other detail deserves attention, and that is the growth of imports charged to the Federation, since the republics and provinces have difficulty agreeing about division of the "burden" of purchasing certain products on foreign markets, and then the way out is found by charging that to the entire community.

7045
CSO: 2800/268

TRADE WITH LIBYA, MALTA

Belgrade PRIVREDNI PREGLED in Serbo-Croatian 4 Feb 82 p 3

[Text] Belgrade, 3 February--The value of trade with Libya in the first 11 months of 1981 reached $463.3 million, which is 24.4 percent more than in the same period in 1980, when the value of this trade was $372.5 million. In this period exports to Libya reached a record $218.9 million, which is 64 percent more than in the first 11 months of 1980. Due to these results Libya has taken second place among the developing countries--after Iraq--on the list of customers for our goods. We have registered a value greater than $5 million in exports of eleven types of goods, of which machines and equipment, devices, and materials comprise 41.5 percent.

An increase was also noted in imports, a 2.5 percent increase to $244.4 million, but since oil still constitutes 99.7 percent of the total imports from Libya, Libya's dissatisfaction, which is emphasized at every meeting of the Joint Committee, is justified.

After almost 20 years of Yugoslav involvement in this investment area, Libya is still in first place in the value and extent of the investment work completed. The total value of the contracts concluded in 1981 exceeds $1.8 billion; among the most valuable of these are those for the power industry and an aluminum complex (Energoinvest), the second phase of the Misurata port project and a fishing port (Ivan Milutinovic), the Naval Academy (Energoprojekt), a hospital (GP Bosna), and supermarkets (Gosa).

In regard to higher forms of cooperation, four joint companies have been formed: two by Energoinvest in the areas of energy and industry, one by Hidrogradnja in the area of agriculture, and one by Geotehnika in the area of water power engineering, while three other joint enterprises are now being registered: Ivan Milutinovic for port work, the Jaroslav Cerni Institute and Geozavod for a consultant bureau, and the Yugoslav Bank for International Economic Cooperation, for a company for work in third markets.

In addition to the above-mentioned results, the delegates at the meeting of the [Yugoslav Economic Chamber] section [for Libya and Malta] were informed of several problems, primarily of a legal nature, which must be settled in order for these joint companies to do business as successfully as possible. Among other things, these unresolved issues include the transfer of the net profit achieved and the repatriation of the capital invested.

Since a meeting of the Joint Committee for Economic and Scientific-Technical Cooperation with Libya is expected at the end of February, these problems and others that have been encountered will be added to the Platform and pointed out to the Libyans.

As for the results of Economic Cooperation with Malta, in the first 11 months of 1981 our trade amounted to $3.4 million, 23.5 percent less in comparison with the same period in 1980. Imports also declined, and reached a modest $481,099, which is 41 percent less than during the same period in 1980, when they amounted to $810,000.

9909
CSO: 2800/247

DRAFT AGREEMENT ESTIMATES ENERGY PRODUCTION TO 1985

Belgrade PRIVREDNI PREGLED in Serbo-Croatian 20-22 Feb 82 p 2

[Excerpt] If all republics and provinces as well as economic organizations, regardless of whether they are coal, oil or gas producers, had voluntarily invested in opening up new and modernizing existing energy sources, the social agreement for this medium-term plan would have been signed already and each would be doing his share of the work. But instead of such an agreement being issued, which was called for in last year's resolution, things are still at the beginning stage. A new version of such an agreement on measures for stimulating the opening of new coal mines and modernizing of existing mines, as well as the exploration of oil and gas fields, recently came to light. According to it, 70 billion dinars would be provided as soon as possible to develop coal mines so that by 1985 we could produce 82 million tons of coal. In order to have an annual production of 5 million tons of oil and 5 billion cubic meters of gas, an additional 85 billion dinars (figured at 1980 prices) would be provided up to 1985. The funds for the planned development of coal mines have contributed most of all to the postponement of the social agreement. While the oil industry believed it could provide funds for its own development, this is not the case with mines. They are so poor that even the above-average increase in the price of coal has not made it thus far possible to allocate significant sums for development. Those who drew up this new version of an agreement (the General Association of Coal Mines, Oil and Gas, the Federal Bureau for Social Planning, the Federal Committee for Energy and Industry) did not specify how much each republic or province should contribute in coal mine development funds. [But] the agreement calls for a coal price rise that would include a percentage for development, which has not been the case up to now. It is believed that 5 percent of the price of solid fuels should be allocated for coal mine development. The request by mines for a 30-percent increase in prices this year is largely motivated by the lack of funds for development.

By making the price of domestic oil equal to that of imported oil, the oil industry is accumulating considerably more funds than other parts of the energy sector. It was suggested [in the agreement version] that this increased capital accumulation be channeled toward opening new oil and gas fields and modernizing existing ones, and that about 11 percent of the total funds needed be provided from retail prices of gasoline and diesel fuel through obligatory fees paid by consumers up to 1985.

By introducing similar fees on the consumption of mazut and heating oil, an additional 46 percent of the total funds needed would be provided by 1985; and the fee on the consumption of less-refined derivatives and gasoline would provide 57 percent of the funds planned for developing coal, oil and gas production up to 1985.

The remaining funds would be provided, it was proposed, largely by long-term bank credits at low interest rates.

CSO: 2800/281

PROBLEMS IN OIL, OIL DERIVATIVE SUPPLIES IN VOJVODINA

Belgrade PRIVREDNI PREGLED in Serbo-Croatian 12 Feb 82 p 11

[Article by Slavica Razic: "The Heavy Demand Is A Consequence of Insecurity"]

[Text] The crude oil imports, reduced by 5.7 percent in comparison with last year, as was decided at the national level, are making conservation absolutely necessary in order to avoid disruptions in supply. Curde oil imports are fixed, and consumption is not, because nothing has been undertaken in an organized manner to orient a reduction in consumption, with the exception of more or less general principles that conservation is necessary everywhere; but where and how this conservation is possible has not been specified. Supplying Vojvodina consumers is even more difficult because this year Vojvodina has to provide 140,000 tons for refineries and 300,000 tons of crude oil for the Pancevo Chemical Works out of its quota. The cases of Bosnia-Hercegovina and Croatia are similar.

Because of the fact that there are no concrete measures for conservation, nervousness has occurred in the market, as well as greater demand, and even temporary abnormal shortages that are more serious than a real shortage is, because someone is creating stockpiles.

Lower Derivative Purchases in January

According to the balance drawn up by the Naftagas-Promet firm for turnover, import-export and services in Novi Sad, there was enough motor gasoline in the province's 1981 supply, and three percent more of it was even sold than in 1980. Gasoline was available almost regularly at all the gas stations; all of them have kept statistics on consumption and all of them have received enough to meet the demand. It is important to emphasize that Vojvodina has the only service for supplying gas stations that supplies all of the stations equally; if at a given time there is 3 percent less gasoline, for example, then deliveries to all of the stations in the province are reduced by this percentage. Vojvodina is supplied with gasoline by the Pancevo refinery, which gives 20 percent of its total production to Vojvodina and 80 percent to the other areas of the Republic.

Last year there were a fair number of problems with diesel fuel and heating oil for households and industry, because there was 8 percent less of them

than in 1980, and it had not been definitively established who was to receive less, so priorities were established, as Svetislav Nedeljkovic, the director general of Naftagas-Promet, emphasized. Thus, for example, at the height of the agricultural season agriculture took priority in diesel fuel supply. There was also a problem with fuel oil, because there was a fourth less of it than in 1980.

In the first month of 1982, 35 percent less oil derivatives were sold than during the same period in 1980. The FEC [Federal Executive Council] in fact made a decision on how oil imports would be financed, and established who could import how much crude oil and from where. According to this agreement, Vojvodina is to import 310,000 tons of crude oil in the first quarter of the current year. So far it has imported 80,000 tons from the USSR and 61,000 tons from Iraq. Because of the shortage of raw materials the Pancevo Refinery is operating at reduced capacity, while the Novi Sad Refinery has a sufficient flow of oil from domestic sources and is operating at full capacity. It should be mentioned that together with imported oil domestic oil forms part of the total quantities of oil distributed in Yugoslavia among the republics and provinces, so that each political-territorial unit has to have about 38.5 percent of its amount of oil imported from the convertible area, about 31 percent from the clearing area, and about 30 percent from domestic production.

Refineries Operating At a Loss

As Nedeljkovic emphasizes, the problem is that the domestic oil belongs to everyone equally, but only Vojvodina and Croatia are financing prospecting and the production of oil. Requests have therefore been made that everyone participate in this financing.

The supply situation is now somewhat difficult and in the next few months the supply will be irregular, because the law on financing crude oil imports is not yet functioning as it should, and the banks are not performing their part of the work promptly, so the crude oil imports are late and have not begun to take place at the planned times. In order to alleviate the shortages, material reserves have been temporarily utilized until this entire procedure regarding oil imports gets under way.

The greatest problem is that agricultural work begins in February and requirements for diesel fuel are appearing, but there are no reserves. Last year at this time there was a stockpile of 10,000 tons of diesel fuel, but now, according to Nedeljkovic, there is not even a drop. Since there has to be some fuel for agriculture, either imports have to be normalized quickly or material reserves have to be utilized. It is expected that the law [on financing oil imports] will begin to function in a month at the latest, and that a regular schedule of oil imports will commence, so that everyone will have access to the planned quantities, even though they are reduced, and the refineries will be able to supply the market with derivatives in a uniform manner.

Last year the refineries operated at heavy losses, since the value of the dollar increased and the interest rates for foreign credits were high, but neither of these had been figured into the refining cost. The losses are enormous and it is necessary to find a solution for covering them; a new price for oil also has to be determined. The oil industry is proposing that the prices of oil derivatives be increased by 18 to 25 percent, with gasoline for aircraft being increased the most. The position of the FEC and the Community on prices is that the increase in retail prices should not be more than 15 to 17 percent, since it is only in this way that the general price policy could be maintained and inflation could be curbed. This increase (15 to 17 percent) would satisfy the refineries only if the Federation did not collect sales tax and if the price were formed differently than in the past. Nedeljkovic gave two examples of the formation of prices in the past. The refinery price for super gasoline is 14.671 dinars, the trade margin is 0.650, and the contributions are 13.179 dinars. For diesel fuel, the refinery price is 12.325, the trade margin is 0.550, and the taxes and contributions are 11.125 dinars, which all together amounts to 24 dinars. The solution in reducing the contributions and increasing the refineries' share in the price.

9909
CSO: 2800/247

AIR TRANSPORT, 1981 EXAMINED

Belgrade PRIVREDNI PREGLED in Serbo-Croatian 3 Feb 82 p 12

[Text] According to the initial assessments, the airplanes of Yugoslav airlines carried 3,658,612 passengers and 19,072.5 tons of goods in 1981. This is 4.9 and 11 percent more, respectively, than in 1980. The best results were achieved in long-distance transportation, carrying 129,132 passengers, or an increase of 32.7 percent, and 4,824.9 tons of goods, or 64 percent more in comparison with the preceding year.

An increase in passengers was also noted in Euro-Mediterranean transportation, with 952,345 passengers, or 5.8 percent more, and 4.838.3 tons of goods, or 0.7 percent more than in 1980.

The number of passengers in domestic transportation was also increased to 2,253,265, or an increase of 4.2 percent, while 9,409.4 tons of cargo were carried, or 0.3 percent less.

In general, a total of 3,334,741 passengers were carried on the regular lines, which is 5.5 percent more, and 19,072.5 tons of cargo, which is 11 percent more than in 1980. Charter transportation, however, showed a decline in the volume of services rendered, namely 0.9 percent less than in 1981 [sic], with 323,870 passengers carried.

9909
CSO: 2800/247

RESULTS OF RESTRICTIONS ON PRIVATE FARMING

Belgrade PRIVREDNI PREGLED in Serbo-Croatian 18 Feb 82 p 11

[Article by Tomislav Kapetanic]

[Text] Why is the land maximum policy a taboo theme, even though all investigations unambiguously show that the classic form of small individual land holding is undergoing a deep production crisis? The land is becoming ever more a source of supplementary income and economic reserve.

Agriculture is once more the source of great concern and unrest. "Where is agriculture heading?" "What is the hitch in land association?" "Low productivity and low profit motivation among agricultural producers form one of the major components of the present stagnation in agriculture." Of course, there are a multitude of opinions about the state of the farmers in Yugoslavia, which are not only different but extremely antagonistic. They range from that old, well-known maxim: "If the farmer has any money, so does everyone else," all the way to opinions that hold that in practical terms there are no more farmers in our country, at least in the literal sense of the word. How then do we explain the undeniable fact that fully 85 percent of all the land is owned by farmers? Thus there still are farmers, but they have "been let loose."

The agricultural worker can own two tractors, a combine and a mill, a car for the city, or for business, he can even have an airplane, but he cannot have more than ten hectares of land. Nothing else is a waystation on the way to wealth, only having more than ten hectares of land is. And why do people not join in association with social complexes? Really, that is the most common topic, but almost no one says what has been done concretely to bring the farmers to associate, or why that process is held up. Despite books and studies, as well as marathon meetings on the subject, the number of associations has not increased noticeably. Is it normal, let us say, for a farmer to transport stock, which in any case has been assigned to the cooperative by agreement, for 100 kilometers and more to a buyer who at the moment is paying more? The farmers' barns are full of last year's corn, but there is no corn at the market. The farmer is waiting. It is even good that the individual producer with his ten hectares should get as much out of them as he can, for that way things will be better for everyone. It is another question, however, as to how many farmers there are who can hold their corn for better days.

Who Can Cultivate the Land?

Studies by sociologists and other experts in the republics and provinces unambiguously show that the classic form of individual ownership is in a deep production crisis. Obviously, all terrains cannot be adapted to the demands of modern food production, nor can an income be assured that will provide the average standard of living for all. Thus it is not surprising that most agricultural workers hold their corn in their barns like dry gold, while they sell their little excess to whomever offers the highest price. That is not peasant demagogy, that is a simple truth with which we must contend under current agricultural conditions, which time has trampled. Agriculture without doubt will have to give in to the people who are not fearful of farmers getting rich, of vacillating and indecisive moods, ignorance and confusion. Faced by the truth of the impossibility of planned food production, few people can remain calm and disinterested.

Does the farmer dream of further integration with the social sector, or is he somewhat sceptical of that? The individual producers do not raise the question of a land maximum directly, or they have an aversion to raising it, but here and there by their example they prove that they are interested in cultivating more land, when they are capable of doing so.

For example, Bernard Bartol of Vrbovec points out that "No one has a right to take away his hoe and shovel." As a producer, he tends 400 swine, plants 23 acres of corn, all without help. He has also leased some land. He got those fields from the local community office, when everyone had already exhausted them. He does not have any long-term agreement for them; rather, there is a limited time period of 3 years and not a day longer. He produces as much as he can. In 1973 he built his farm and took out a credit of 4 million dinars, but he immediately gave the bank 2 million dinars as his participation. Others got as much as 25 million dinars, but they only produce stock in one cycle. Why? They produce only for fall, when the demand for pork is high. Before that, they have no promise of sales. When there is a single surplus hog, or a single surplus beef, or a single extra liter of milk, it is an open question as to whom they can sell to.

The agricultural workers talk concretely; Bogumil Benak, from near Daruvar, says: "I am quite amazed that our politicians, and experts as well, avoid the realization that the whole world knows. We are constantly seeking some technological system of our own, but people thought up those systems long ago. We simply have to adjust them to suit our circumstances. But what happens: 'We are afraid the farmers will become rich, and so we constantly seek some other solutions.' And finally, everything stays the way it was..."

The Standstill is Developing the Individual Sector Continues

The situation, problems and difficulties in agricultural development these days are once again brought up to date in certain parts of the draft resolution "The Report on the Activities of the Croatian League of Communists and the Work of its Agencies Between the 8th and 9th Congresses." Along with the comprehensive judgment that the results achieved in that period have not been

satisfactory, but rather stanation has set in, and production of basic agricultural products has dropped, this material suggests conclusions that, because of insufficient cooperation between the social and individual sectors of agriculture, this second segment continues to lag in development. Meanwhile, social agricultural enterprises are unable to satisfy current market needs.

Social agricultural enterprises have not utilized the climate of agrarian decline and the weakening interest for making the land provide the basic sources of existence. Since that disintegration of the village is continuing, there is a steady decline in the number of potential heirs, so that it is apparent that much more importance must be attributed to the present phase of social changes in the village. Consequently, the direction for concrete social action must be determined; certain specialists call this endeavor a new agrarian policy.

It is no longer a rare occurrence for people to advocate higher land maximums for full-time agricultural workers. There are households in the republics and provinces that work considerably more than ten hectares of tillable land. By economic logic life itself, outside the law in practical terms, has increased the farmers' land maximums in many regions. It is a fact that in Slovenia, there are farmers who work as many as 100 hectares by leasing land. This caused no reaction, for to many this sort of discussion is taboo. Leasing is a day-to-day deal, and for serious economic and long-term goals it is the most dangerous solution.

The fact that the matter of the land maximum here has become more a political issue than an economic one is further demonstrated by the fact that only two republics, Bosnia and Hercegovina and Slovenia, have passed a law permitting increased land maximums in hilly and mountainous areas. In Croatia and Serbia, however, they are still discussing such action from various, largely negative viewpoints. They forget that due to the functioning of economic principles, increased land parcels would be preferable to small holdings, for in that manner the producer would have to specialize for increased production, which he would sell to a social organization. Naturally, he would receive an established price for his produce, along with incentives and benefits. It would certainly be easier for the social sector to accomplish labor and program adjustments with a small number of larger individual producers than with hundreds and thousands of small landholders. In seeking solutions that would bring higher food production, we certainly should not lose sight of elementary political, social and economic principles, but at the same time we cannot advocate conceptions that were logical and essential decades ago.

12131
CSO: 2800/240

BRIEFS

JOB INSECURITY FOR WORKERS IN AUSTRIA--We expect that the Austrian trade union federation in which we represent the largest number of members will take necessary measures in accord with Yugoslav-Austrian bilateral agreements and Austrian social welfare laws, but also on the principle of worker solidarity, to prevent the further radical worsening of the position of Yugoslav workers and to provide for their protection and social security. This was stated in a letter to the presidium of Austrian Trade Unions which was sent by representatives of coordinating councils and the Association of Yugoslav Workers throughout Austria. In the letter to Anton Benn, president of the trade union federation, it was also stressed that Yugoslav workers in Austria are concerned over the abrupt and serious worsening of their position which is partly caused by the present situation on the labor market. From mid-December 1981 to mid-January 1982 the number of foreign workers in Austria, most of whom are Yugoslavs, was reduced by more than 20,000. [Text] [Belgrade BORBA in Serbo-Croatian 20 Feb 82 p 7] According to official data, 13,518 Yugoslavs temporarily employed in Austria are without work, or 8.7 percent of all unemployed in Austria. In the last few years the number of our workers employed in Austria declined by 12,268; at present 91,347 Yugoslavs are working in Austria. Employers have not renewed some contracts and even the usual agreement for seasonal Yugoslav workers has not yet been signed. Also of concern are the more severe government measures to prevent an increase in unemployment among Austrians, by reducing foreign labor by 10 percent. [Excerpt] [Belgrade BORBA in Serbo-Croatian 28 Feb 82 p 2]

FIRES IN 1981--Last year there were a total of 10,972 fires in Yugoslavia, including 4,930 in the socialized sector; this is a 2.6 percent increase over 1980. The material damage was more than twice that in 1980, amounting to 2.8 billion dinars (2.2 billion dinars in the socialized sector). Of the total number, 5.3 percent were deliberately set, while the cause could not be determined for an additional 20 percent of the fires. In only 5 to 10 percent of the cases have criminal proceedings been brought against those responsible. [Excerpt] [Zagreb VJESNIK in Serbo-Croatian 10 Feb 82 p 3]

RAILROAD PROBLEMS--Yugoslav railroad transportation organizations recorded 2.3 billion dinars in losses last year. The cost of travel increased about 40 percent, but there was [still] a considerable lag in the cost of transport services compared to other branches of the economy. There were also very clear problems in regard to the position of railroads on the

transportation market, their lack of foreign exchange for operation, and the poor possibilities for developing and modernizing the railroads. Last year there were 386 railroad accidents in which 97 people were killed and 138 passengers and railroad personnel seriously injured. More than 100 people lost their lives and almost 200 were seriously injured in accidents at railroad crossings. The volume of goods transported has stagnated and the quality of services continues to be unsatisfactory. Delays in freight transportation increased by almost 13 percent over 1980 and off-loading waiting time increased 7.5 percent. [Excerpt] [Sarajevo OSLOBODJENJE in Serbo-Croatian 27 Feb 82 p 5]

PORT OF KOPAR--This year the port of Kopar should increase goods traffic 5 percent compared to 1981, or to 1.16 million tons, not including oil and oil products. Most attention this year will be directed to modernizing on- and off-loading operations, and especially to the development of container terminals and preparatory work on coal terminals to handle coal shipments to Austria and West Germany. Modernization and increased traffic at the port is expected to raise total revenue 11 percent over last year and to increase revenue from services to foreign partners 25 percent (this revenue will account for almost one-third of all revenue). [Text] [Belgrade PRIVREDNI PREGLED in Serbo-Croatian 20-22 Feb 82 p 14]

CSO: 2800/281

END

END OF FICHE DATE FILMED

March 25, 1982